Trials@uspto.gov
571-272-7822

Paper No. 10
Entered: December 4, 2015

UNITED STATES PATENT AND TRADEMARK OFFICE

BEFORE THE PATENT TRIAL AND APPEAL BOARD

LEGACY SEPARATORS, LLC,
Petitioner,

v.

HALLIBURTON ENERGY SERVICES, INC.,
Patent Owner.

Case IPR2015-01526
Patent 6,761,215 B2

Before JOSIAH C. COCKS, SUSAN L. C. MITCHELL, and JAMES J. MAYBERRY, *Administrative Patent Judges*.

MAYBERRY, *Administrative Patent Judge*.

DECISION

Denying Institution of *Inter Partes* Review
37 C.F.R. § 42.108

I. INTRODUCTION

Petitioner, Legacy Separators, LLC ("Legacy"), filed a Petition (Paper 1, "Pet.") requesting *inter partes* review of claims 1–17 of U.S. Patent No. 6,761,215 B2 ("the '215 patent"). Patent Owner, Halliburton Energy Services, Inc. ("Halliburton"), timely filed a Preliminary Response (Paper 9, "Prelim. Resp.") to the Petition. We have jurisdiction under 35 U.S.C. § 314.

To institute an *inter partes* review, we must determine that the information presented in the Petition shows "a reasonable likelihood that the petitioner would prevail with respect to at least 1 of the claims challenged in the petition." 35 U.S.C. § 314(a). For the reasons set forth below upon considering the Petition and the Preliminary Response, we conclude that the information presented in the Petition does not establish a reasonable likelihood that Legacy will prevail in challenging any of claims 1–17 of the '215 patent. We do not authorize an *inter partes* review to be instituted as to any challenged claim.

A. Related Maters

According to the Petition, the '215 patent is not the subject of litigation or other proceeding in front of the Patent Office. Pet. 3.

B. The '215 Patent

The '215 patent, titled "Downhole Separator and Method," issued July 13, 2004. Ex. 1001. The face of the patent lists James Eric Morrison and

Guy Morrison, III as inventors.[1] The claims of the ’215 patent are directed to a gas and liquid separator and method for separating gas and liquid from a production fluid in a well. *Id.* at 4:55–6:55. Specifically, the separator and separating method employ a structure, such as a bearing housing, that restricts flow between two chambers of the separator. *Id.*, Abstract.

Figures 1 and 2, reproduced below, depict an embodiment of the apparatus.

[1] The Petition indicates that Guy Morrison, III is the managing member of Petitioner. Pet. 3. The Petition further indicates that Guy Morrison, III has no ownership interest in the ’215 patent. *Id.*

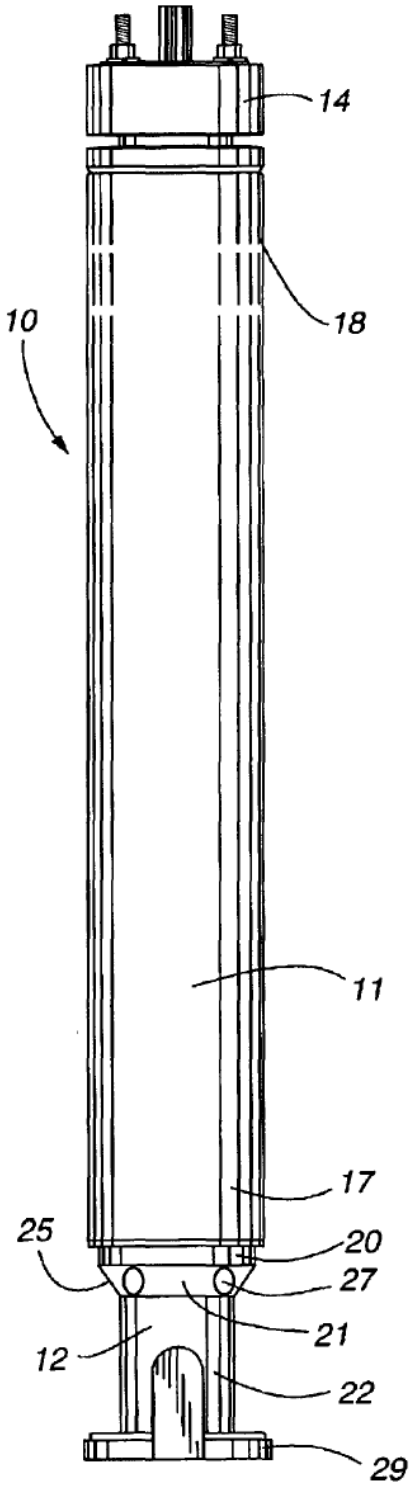
14
18
10
11
17
25
20
27
21
12
22
29

Fig. 1

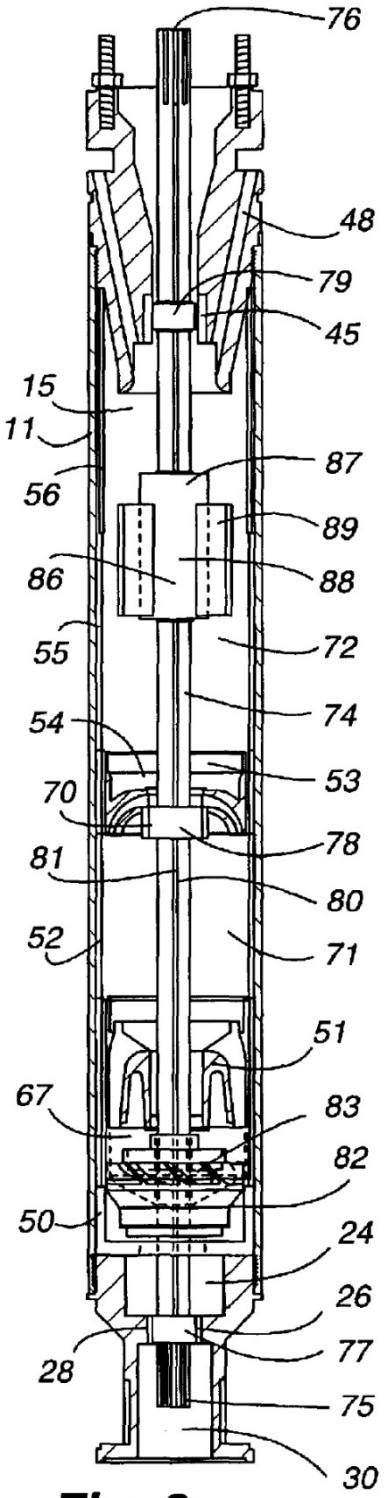
76
48
79
45
15
11
87
56
89
86
88
55
72
54
74
53
70
78
81
80
52
71
51
67
83
82
50
24
26
28
77
75
30

Fig. 2

Figure 1 depicts "a side elevation view of" the embodiment and Figure 2 depicts "a side cut away view of the separator" shown in Figure 1. Ex. 1001, 1:61–63. Details of the invention are best understood by way of an explanation of how the separator works. Impeller 83 draws in fluid from the surrounding well through inlet ports 27 and lower diffuser 50. *Id.* at 4:3–5. The fluid is pumped through upper diffuser 51 to bearing housing 54. *Id.* at 4:6–8.

Bearing housing 54 includes radially-arranged passages 69 (*see* Ex. 1001, Fig. 6), which restrict fluid flow, causing bearing housing 54 to divide the separator into first and second chambers (chambers 71 and 72). Ex. 1001, 3:30–37. As fluid flows through passages 69, the restriction generates a pressure drop in the fluid and causes a rapid expansion of the fluid when it enters chamber 72. *Id.* at 4:11–13. The rapid expansion of the fluid causes the gas and liquid in the fluid to separate. *Id.* at 4:13–15. Bearing housing 54 further includes bearing aperture 68 and intermediate bearing 70, which is mounted in bearing aperture 68. *Id.* at 3:30–34.

Within second chamber 72, the fluid is acted on by vortex generator 87. Vortex generator 87, with paddles 89, is connected to shaft 74, which drives both vortex generator 87 and impeller 83 of internal pump 82. Ex. 1001, 3:62–66. Vortex generator 87 imparts circular motion on the fluid in chamber 72 and this circular motion serves to centrifugally separate the liquid and gas components of the fluid—the heavier liquid moves towards the outside of chamber 72 and the gas moves to the inside of chamber 72. *Id.* at 4:15–19. The liquid passes through liquid outlet ports 47 into the well pump and the gas moves to gas ports 48 and out of the separator at channel 39. *Id.* at 4:19–22.

C. Illustrative Claims

Claims 1, 9, 10, and 17 of the challenged claims of the ’215 patent are independent. Claims 1 and 10 are representative of the claimed subject matter and are reproduced below.

> 1. A downhole gas and liquid separator for a well comprising:
>
> first and second chambers,
>
> an internal pump for pumping production fluid through said first chamber, and into said second chamber,
>
> means, positioned a between said first and second chambers, for restricting fluid flow to generate a pressure drop in said production fluid and to separate gas and liquid as said production fluid enters said second chamber, and
>
> a vortex generator in said second chamber to centrifugally separate said fluid into gas and liquid.
>
> 10. A method of separating gas and liquid from production fluid in a well comprising the steps of:
>
> providing connected first and second chambers,
>
> pumping said production fluid into said first chamber,
>
> generating a pressure drop in said production fluid as said production fluid flows from said first chamber to said second chamber, to separate said gas and said liquid, and
>
> generating a vortex in said second chamber, to further separate said gas and said liquid.

Ex. 1001, 4:55–67, and 5:50–6:2.

D. The Prior Art

Legacy's asserted grounds of unpatentability for the challenged claims of the '215 patent rely on the following references:

Carle	US 3,300,950	Jan. 31, 1967	Ex. 1007
Tuzson	US 4,088,459	May 9, 1978	Ex. 1008
Lee ("Lee '193")	US 6,066,193	May 23, 2000	Ex. 1006
Lee ("Lee '345")	US 6,155,345	Dec. 5. 2000	Ex. 1009

E. Asserted Grounds of Unpatentability

Legacy asserts the following grounds of unpatentability for the challenged claims of the '215 patent.

References	**Basis**	**Claims Challenged**
Lee '193	102(b)	1–4 and 6–17
Lee '193 and Carle	103(a)	5
Tuzson	102(b)	1–4, 8, and 10–16
Lee '193 and Lee '345	103(a)	1–4 and 6–17

II. ANALYSIS

A. Claim Construction

In an *inter partes* review, claim terms in an unexpired patent are given their broadest reasonable construction in light of the specification of the patent in which they appear. 37 C.F.R. § 42.100(b); *see also In re Cuozzo Speed Techs., LLC*, 793 F.3d 1268, 1278 (Fed. Cir. 2015) ("We conclude that Congress implicitly approved the broadest reasonable interpretation

standard in enacting the AIA."). Under the broadest reasonable construction standard, claim terms are given their ordinary and customary meaning, as would be understood by one of ordinary skill in the art in the context of the entire disclosure. *In re Translogic Tech., Inc.*, 504 F.3d 1249, 1257 (Fed. Cir. 2007). Also, we are careful not to read a particular embodiment appearing in the written description into the claim if the claim language is broader than the embodiment. *See In re Van Geuns*, 988 F.2d 1181, 1184 (Fed. Cir. 1993) ("[L]imitations are not to be read into the claims from the specification.") (citation omitted). Finally, "only those terms need be construed that are in controversy and *only to the extent necessary to resolve the controversy*." *Vivid Techs., Inc. v. Am. Sci. & Eng'g, Inc.*, 200 F.3d 795, 803 (Fed. Cir. 1999) (emphasis added).

1. *"means, positioned a between said first and second chambers, for restricting fluid flow to generate a pressure drop in said production fluid and to separate gas and liquid as said production fluid enters said second chamber"*

Independent claim 1 recites a "means, positioned a between said first and second chambers, for restricting fluid flow to generate a pressure drop in said production fluid and to separate gas and liquid as said production fluid enters said second chamber." Ex. 1001, 4:61–66. Legacy recognizes that this claim limitation invokes the requirements of 35 U.S.C. § 112, paragraph 6, and we agree.[2] *See* Pet. 20. Accordingly, we construe this limitation by

[2] Paragraph 6 of 35 U.S.C. § 112 was replaced with newly designated § 112(f) when § 4(c) of the America Invents Act (ALA), Pub.L. No. 112–29, took effect on September 16, 2012. Because the application resulting in the

determining the claimed function and identifying the structure disclosed in the specification that corresponds to the means for performing that function. *See Kemco Sales, Inc. v. Control Papers Co.*, 208 F.3d 1352, 1360 (Fed. Cir. 2000); *see also In re Donaldson Co.*, 16 F.3d 1189, 1193 (Fed. Cir. 1994) ("[P]aragraph six applies regardless of the context in which the interpretation of means-plus-function language arises, i.e., whether as part of a patentability determination in the PTO or as part of a validity or infringement determination in a court.").

Legacy identifies three functions associated with the recited means: 1) restricting the production fluid flow; 2) generating a pressure drop in the production fluid; and 3) separating the gas from the liquid. Pet. 20–21. Legacy identifies the structure disclosed in the '215 patent associated with these functions as "bearing housing 54 having flow-restricting-passages" (that is, passages 69). *Id.* at 21. Halliburton does not dispute Legacy's position at this time, as Halliburton asserts that "[t]he claims are patentable even under [this] proposed construction." Prelim. Resp. 10.

We determine, for the purposes of this Decision, that the claimed functions for this limitation are 1) restricting fluid flow to generate a pressure drop in the production fluid, and 2) restricting fluid flow to separate gas and liquid as the production fluid enters said second chamber. Legacy's construction captures this two-fold function, but fails to associate the functions of generating a pressure drop in the production fluid and separating gas and liquid as the production fluid enters the second chamber

---

'215 patent was filed before that date, we refer to the pre-AIA version of § 112.

with restricting fluid flow, but instead improperly identifies restricting production fluid flow as a separate function. We agree with Legacy that the structure associated with these functions is bearing housing 54 with passages 69.

2. "internal pump"; "diagonally extending passages"; and "paddle"

Legacy provides constructions for the terms "internal pump"; "diagonally extending passages"; and "paddle." Pet. 21–22. We do not construe these terms as their construction is not necessary to resolve the controversy before us, as will be evident from our analysis of the asserted grounds of unpatentability, *infra*.

B. Asserted Grounds of Unpatentability

Legacy proposes four grounds of unpatentability for claims 1–17 of the '215 patent: 1) claims 1–4 and 6–17 are unpatentable under 35 U.S.C. § 102(b) as anticipated by Lee '193; 2) claim 5 is unpatentable under 35 U.S.C. § 103(a) over Lee '193 and Carle; 3) claims 1–4, 8, and 10–16 are unpatentable under 35 U.S.C. § 102(b) as anticipated by Tuzson; and 4) claims 1–4 and 6–17 are unpatentable under 35 U.S.C. § 103(a) over Lee '193 and Lee '345. Legacy presents a limitation-by-limitation analysis of the identified claims against the identified references. *See* Pet. 23–58. Halliburton's Preliminary Response presents detailed arguments countering positions taken in the Petition. *See* Prelim. Resp. 16–46.

1. Claims 1–4 and 6–17 and Lee ’193

a. Overview of Lee ’193

Lee ’193, titled “Tapered Flow Gas Separation System,” is directed to a submersible pumping system adapted to separate gas from liquids prior to pumping the liquids to the earth’s surface. Ex. 1006, 1:6–9.

Lee ’193’s Figure 2 is reproduced below.

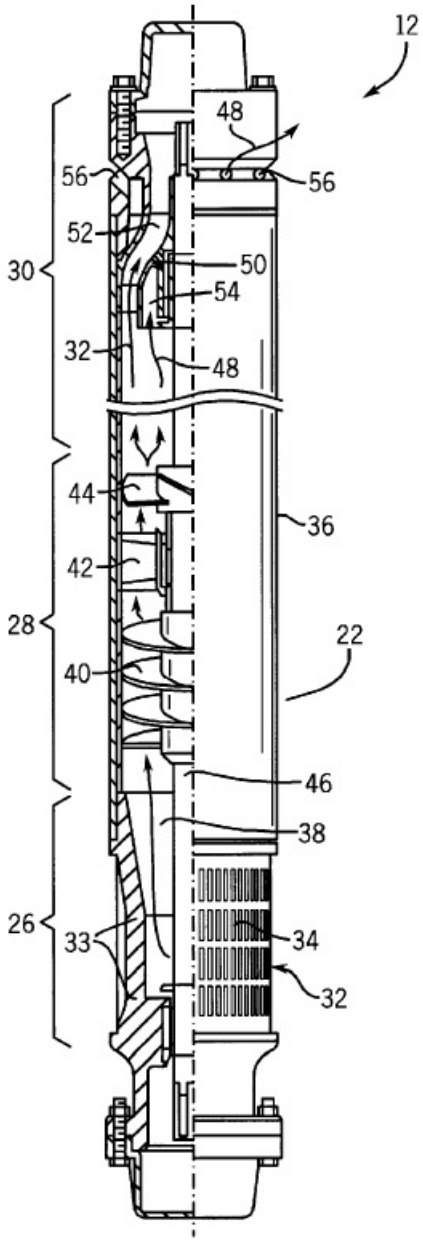

Figure 2 depicts "a vertical elevation partial sectional view of a low flow gas separator." Ex. 1006, 3:33–34. Lee '193's invention is directed to two gas separators—a high flow separator and a low flow separator—coupled in series. *Id.* at 2:8–28, Fig. 4. Each of these separators are similar in structure, with the primary difference being that the high flow separator is sized to handle a greater flow rate than the low flow separator. *See id.* at 6:57–65; *see also id.*, Fig. 3 (depicting a high flow gas separator).

The low flow separator includes intake section 26, which includes intake ports 33 and intake grate 34. Ex. 1006, 4:53–54. Production fluid is drawn into the separator through the intake ports and grate and into inducer section 28, which includes inducer 40, diffuser 42, and centrifuge 44. *Id.* at 4:58–64. Inducer 40, which is coupled to shaft 46, includes impeller blades and, as shaft 46 rotates, inducer 40's blades rotate to draw production fluid into the inducer, increasing the fluid's pressure as the fluid moves to diffuser 42. *Id.* at 5:2–12.

Diffuser 42 acts on the production fluid to increase the fluid's pressure. Ex. 1006, 5:13–14. Diffuser 42, which is stationary relative to shaft 46, splits the production fluid prior to the fluid encountering centrifuge 44 and may also serve as a bearing support. *Id.* at 5:14–18. In the embodiment of Figure 2, diffuser 42 has a blade-like form. *Id.* at 5:19.

Production fluid leaves diffuser 42 and encounters centrifuge 44, which is coupled to shaft 46 and rotates along with the shaft. Ex. 1006, 5:28–30. Centrifuge 44 imparts centrifugal motion on the production fluid, such that the heavier liquid components of the fluid move to the outside of separator and the lighter gaseous components move towards the center of the separator, separating the components. *Id.* at 5:30–39. The separated liquid

components are directed towards a pump, which pumps the liquid to the earth's surface, and the gaseous components are vented through vent holes 56. *Id.* at 5:47–53.

Lee '193 is identified in the "Background Art" section of the '215 patent as disclosing a powered rotary separator, Ex. 1001, 1:31–33, but Lee '193 did not form the basis of any rejection of claims during prosecution of the application that matured into the '215 patent, *see* Ex. 1011 (providing the prosecution history of U.S. Application 10/236,348, which issued as the '215 patent).

b. Claims 1–4 and 6–8

Legacy contends that Lee '193 anticipates claim 1 of the '215 patent, including disclosing "means, positioned a between said first and second chambers, for restricting fluid flow to generate a pressure drop in said production fluid and to separate gas and liquid as said production fluid enters said second chamber." Pet. 23–30 (relying on the embodiment depicted in Lee '193's Figure 2). Specifically, Legacy contends that Lee '193's diffuser 42 satisfies the means-plus-function limitation of claim 1.

Legacy asserts that diffuser 42 performs the functions of the recited means-plus-function limitation of claim 1—restricting fluid flow, generating a pressure drop, and separating the gas and liquid in the production fluid. Pet. 27. First, Legacy contends that diffuser 42 restricts flow because, as Lee '193 expressly discloses, diffuser 42 "acts to increase the pressure on the production liquid." *Id.* (quoting Ex. 1006, 5:13–16). Legacy argues that "[t]he skilled artisan knows that in order to increase production fluid pressure, the diffuser 42 necessarily has fluid-flow-restricting passages." *Id.* at 29 (referencing Ex. 1010, Declaration of Dr. Gary Wooley).

Next, Legacy contends that diffuser 42 generates a pressure drop in the production fluid. Pet. 27. Legacy argues that 1) because inducer 40 pressurizes the fluid in a chamber below diffuser 42 to a pressure greater than the pressure of the fluid in the well-bore annulus from where the fluid is drawn, and 2) because the section of the separator above diffuser 42 that includes centrifuge 44 is vented to the well-bore, meaning that its pressure is less than the pressure in the chamber below diffuser 42, there must be a pressure drop across diffuser 42. *Id.*; *see also id.* at 29–30 ("The increased pressure of the production fluid leaving the diffuser 42, in comparison to the reduced pressure in the vented separation chamber, generates a pressure drop in the production fluid entering the separation chamber.") (citing Ex. 1010).

Finally, Legacy contends that diffuser 42 splits the production fluid into its gas and liquid components prior to the production fluid encountering centrifuge 44. Pet. 27 (referencing Ex. 1006, 5:13–16).

We find, on the record before us, that Legacy fails to persuade us that Lee '193 discloses the recited means of claim 1. First, Legacy fails to support its contention that diffuser 42 *necessarily* restricts flow because it increases pressure in the production fluid. Indeed, a diffuser operates in the exact opposite manner—it increases the cross-sectional flow area that a fluid passes through, which causes the fluid to decrease in velocity and increase in pressure. Further, Legacy's general citation to Dr. Wooley's declaration fails to lend support to its position. We are directed to nothing in Dr. Wooley's declaration, other than a conclusory statement that Lee '193 anticipates claim 1, to lend support to the position that the disclosure that diffuser 42 increases fluid pressure necessarily means that diffuser 42 restricts fluid flow. Accordingly, we find that Lee '193's disclosure that

fluid pressure increases as it passes through diffuser 42 does not support a finding that diffuser 42 necessarily restricts fluid flow.

More significantly, the means-plus-function recitation of claim 1 requires that the corresponding means restrict fluid flow *to generate a pressure drop in the production fluid*—that is, a consequence of the restricted flow is to generate a pressure drop in the fluid. As Legacy recognizes, diffuser 42 causes an *increase* in the fluid pressure, not a drop in the fluid pressure as the production fluid passes through the diffuser. *See* Pet. 27; *see also* Prelim. Resp. 20 ("On the contrary, . . . the diffuser in Lee '193 **increases** the pressure of the fluid.").

Legacy's argument that diffuser 42 functions to generate a pressure drop in the production fluid is equally unavailing. As an initial matter, Legacy's position contradicts its position that diffuser 42 increases the pressure in the production fluid. Legacy fails to adequately explain how diffuser 42 can act to both increase pressure in the production fluid and cause a pressure drop "across diffuser 42." *See* Pet. 27. Legacy attempts to avoid this contradiction by asserting that "[t]he increased pressure of the production fluid leaving the diffuser 42, in comparison to the reduced pressure in the vented separation chamber, *generates a pressure drop in the production fluid entering the separation chamber*." *Id.* at 29–30 (emphasis added). That is, Legacy argues that the pressure drop function is achieved because the pressure of the production fluid as it *leaves* diffuser 42 is greater than the pressure in the fluid within the separator section housing centrifuge 44. However, as argued by Legacy, this pressure profile would result in a pressure drop in the fluid across the second chamber, not across diffuser 42. Significantly, the means of claim 1 must function to restrict

fluid flow to generate a pressure drop in the production fluid—that is, the generated pressure drop results from restricting the flow *in the means*.

Finally, Legacy's assertion that diffuser 42 functions to separate the gas and liquid components of the production fluid is not supported by the disclosure of Lee '193. Lee '193 discloses that "diffuser **42** splits the flow of the production liquid **32** prior to its encountering the centrifuge **44**." Ex. 1006, 5:14–16. Legacy fails to adequately explain how this disclosure teaches or suggests that production liquid 32 is split into gas and liquid components, rather than merely split into multiple streams, such as by its blade-like form splitting the stream. *See id.* at 5:19; *see also* Prelim. Resp. 20–21 (explaining that Lee '193 merely discloses that the flow of production fluid is split, not that the gaseous and liquid components are separated).

"A claim is anticipated only if each and every element as set forth in the claim is found, either expressly or inherently described, in a single prior art reference." *Verdegaal Bros. v. Union Oil Co. of Cal.*, 814 F.2d 628, 631 (Fed. Cir. 1987). On the record before us, we conclude that Legacy has failed to show a reasonable likelihood of prevailing in its assertion that Lee '193 anticipates claim 1. Further, we conclude that Legacy has failed to show a reasonable likelihood of prevailing in its assertion that claims 2–4 and 6–8, which depend, directly or indirectly, from claim 1, are anticipated by Lee '193.

c. Claim 9

Independent claim 9 does not include the means-plus-function claim limitation of claim 1. Instead, claim 9 recites a "fluid flow restricting bearing housing." Ex. 1001, 5:42. Claim 9 further limits the recited bearing housing by functional claim language—requiring the housing to "restrict[]

fluid flow to generate a pressure drop in said production fluid and to separate gas and liquid as said production fluid enters said second chamber." *Id.* at 5:43–46. It is well established that features of an apparatus may be recited either structurally or functionally, however, claims directed to an apparatus must be distinguished from the prior art in terms of structure rather than function. *In re Schreiber*, 128 F.3d 1473, 1477–78 (Fed. Cir. 1997). That is, "choosing to define an element functionally, *i.e.*, by what it does, carries with it a risk," as functional language is not given patentable weight if the prior art structure can inherently perform the function. *See id*. at 1478.

In asserting that Lee '193 anticipates claim 9, Legacy incorporates its arguments that Lee '193 discloses the means-plus-function claim limitation of claim 1 and the subject matter of claim 6.[3] Pet. 34. We find that this argument fails to demonstrate how Lee '193's diffuser 42 inherently restricts fluid flow to generate a pressure drop in said production fluid and to separate gas and liquid as said production fluid enters said second chamber as required by claim 9. The functional language of claim 9 is comparable to the functions recited in the means-plus-function limitation of claim 1. As we discussed above, in connection with our analysis of claim 1, Legacy fails to convince us that diffuser 42 performs the functions of the means-plus-function element of claim 1. By merely incorporating its arguments from claim 1, Legacy similarly fails to convince us that diffuser 42 inherently

[3] Claim 6 recites "[t]he separator as set forth in claim **2** wherein said means for restricting fluid flow is a bearing housing that has a bearing that stabilizes said shaft." Ex. 1001, 5:12–14. Legacy contends that Lee '193 discloses that diffuser 42 satisfies this claim limitation. Pet. 31 (referencing Ex. 1006, 4:66–67).

satisfies the functional language associated with the bearing housing of claim 9.

On the record before us, we conclude that Legacy has failed to show a reasonable likelihood of prevailing in its assertion that Lee ’193 anticipates claim 9.

d. Claims 10–16

Independent claim 10 is a method claim that recites, in relevant part, the step of “generating a pressure drop in said production fluid as said production fluid flows from said first chamber to said second chamber, to separate said gas and said liquid.” Ex. 1001, 5:54–56. In supporting its position that Lee ’193 anticipates claim 10, Legacy relies on its analysis of the means-plus-function claim limitation of claim 1. Pet. 35. In the analysis of claim 1, Legacy contends that “[t]he increased pressure of the production fluid leaving the diffuser 42, in comparison to the reduced pressure in the vented separation chamber, generates a pressure drop in the production fluid entering the separation chamber.” *Id.* at 29–30.

Claim 10 expressly requires generating a pressure drop in the production fluid as the fluid flows from the first chamber to the second chamber—not as the fluid flows through the second chamber. As we discussed in connection with our analysis of the means-plus-function claim limitation of claim 1, we find that Lee ’193 discloses that the pressure of the production fluid increases as it flows through diffuser 42. By merely incorporating its arguments from claim 1, Legacy fails to convince us that diffuser 42 satisfies the generating a pressure drop step of claim 10, as Legacy fails to explain how the generating a pressure drop step differs from

the recited pressure drop function of the means-plus-function limitation of claim 1.

On the record before us, we conclude that Legacy has failed to show a reasonable likelihood of prevailing in its assertion that Lee ’193 anticipates claim 10. Further, we conclude that Legacy has failed to show a reasonable likelihood of prevailing in its assertion that claims 11–16, which depend, directly or indirectly, from claim 10, are anticipated by Lee ’193.

d. Claim 17

Independent claim 17 is a method claim and recites, in relevant part, the steps of “providing connected first and second chambers, a bearing housing between said first and second chambers, . . . said bearing housing having a plurality of restrictive passages extending helically between said first and second chambers,” and “passing said production fluid through said passages with said passing generating a pressure drop in said production fluid.” Ex. 1001, 6:33–39, 6:41–43. In supporting its position that Lee ’193 anticipates claim 17, Legacy relies on its analysis of the means-plus-function claim limitation of claim 1 and also its analysis of claims 6 and 7.[4] Pet. 36.

As discussed above in connection with our analysis of claims 1, 9, and 10, Legacy fails to demonstrate how Lee ’193’s diffuser 42 generates a pressure drop as production fluid is passed through diffuser 42. Indeed, Legacy first argues that diffuser 42 necessarily has restrictive passages

[4] Claim 7 recites “[t]he separator as set forth in claim **6** wherein said bearing housing has a plurality diagonally extending passages between said first and second chambers that restrict fluid flow and propel said production fluid into said second chamber in a diagonal direction, and thereby initiate vortex generation.” Ex. 1001, 5:14–19. Legacy contends that Lee ’193’s diffuser 42 satisfies the recitation of claim 7. Pet. 31–32.

because Lee ’193 discloses that production fluid pressure *increases* as it passes through diffuser 42. *See* Pet. 32 (analyzing claim 7); *see also* Pet. 27 (“The diffuser 42 restricts the flow because it ‘acts to increase the pressure on the production liquid.’”) (quoting Ex. 1006, 5:13–16). Then, Legacy argues that passing fluid through these restrictive passages results in a pressure drop in the fluid, as required by claim 17. Pet. 37. We are not convinced that Lee ’193’s diffuser 42 includes restrictive passages or that passing production fluid through diffuser 42 generates a pressure drop in the fluid.

For the reasons discussed above in our analysis of claims 1, 9, and 10, Legacy fails to demonstrate that Lee ’193 satisfies the steps of providing a “bearing housing having a plurality of restrictive passages extending helically between said first and second chambers” and “passing said production fluid through said passages with said passing generating a pressure drop in said production fluid” as required by claim 17.

On the record before us, we conclude that Legacy has failed to show a reasonable likelihood of prevailing in its assertion that Lee ’193 anticipates claim 17.

2. Claim 5 over Lee ’193 and Carle

Claim 5 depends, indirectly, from claim 1 and further recites “an upper diffuser between said impeller and said means for restricting fluid flow that directs said production fluid from said impeller toward said means for restricting fluid flow.” Ex. 1001, 5:8–11. Legacy contends that claim 5 is obvious over the combination of Lee ’193 and Carle. Pet. 37–41. In

supporting this assertion, Legacy relies on its position that Lee ’193 anticipates claim 1. *See id.*

As discussed above in connection with our analysis of claim 1 as anticipated by Lee ’193, Legacy fails to persuade us that Lee ’193 anticipates claim 1—specifically, Legacy fails to persuade us that Lee ’193 includes the recited means-plus function limitation of claim 1. Further, Legacy fails to explain how Carle remedies this deficiency.

Accordingly, on the record before us, we conclude that Legacy has failed to show a reasonable likelihood of prevailing in its assertion that claim 5 is unpatentable over Lee ’193 and Carle under Ground 2.

3. Claims 1–4, 8, and 10–16 and Tuzson

a. Overview of Tuzson

Tuzson, titled “Separator,” is directed to “separators for separating fluids of different densities and especially to gas separators, i.e., a separator for separating the liquid and gaseous phases encountered in oil and water wells and of the type associated with a submersible motor-pump assembly.” Ex. 1008, 1:5–10.

Tuzson’s Figure 1 is reproduced below:

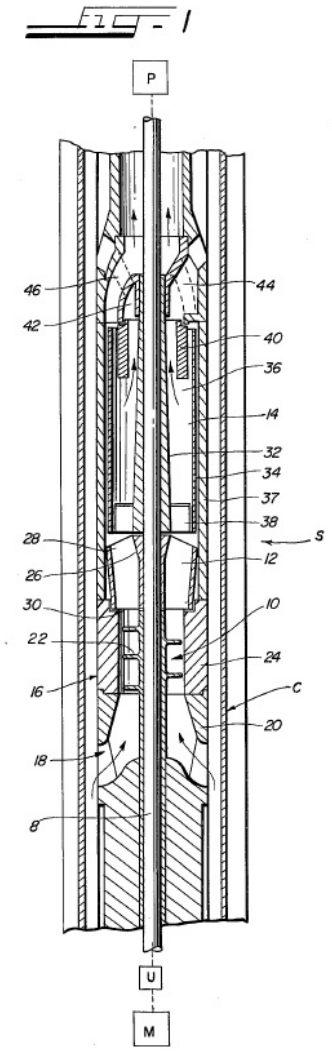

Figure 1 depicts "a longitudinal sectional view" of a separator in accordance with Tuzson's invention. Ex. 1008, 2:22–23. Tuzson's separator includes three stages: inducer stage 10, impeller stage 12, and centrifugal separator stage 14. *Id.* at 2:41–44. Inducer stage 10 includes helical screw 22, which is connected to central shaft 8, with shaft 8 imparting rotational motion to helical screw 22. *Id.* at 2:47–48. Inducer stage 10 draws production fluid into the separator through inlets 18, pressurizing the fluid and conveying the fluid to impeller stage 12. *Id.* at 2:49–51.

Impeller stage 12 includes member 26 with guide vanes 28, member 26 being attached to shaft 8, which imparts rotational motion on member 26. Ex. 1008, 2:51–53. Impeller stage 12 imparts rotational motion to the fluid conveyed from inducer stage 10. *Id.* at 2:53–55.

Centrifugal stage 14 includes radially directed vanes 36 that join members 32 and 34 to form segmented cavities in centrifugal stage 14. Ex. 1008, 2:58–62. Member 32 connects to shaft 8, which causes the assembly of members 32 and 34 and vanes 36 to rotate. *Id.* at 2:62–64. This rotational motion causes the lighter fluid components, such as gas, to flow to the interior of centrifugal stage 14 and the heavier fluid components to flow to the outside of centrifugal stage 14, so that these components may be separated. *Id.* at 3:6–17.

<u>b. Claims 1–4 and 8</u>

Legacy contends that Tuzson anticipates claim 1 of the ’215 patent. Pet. 44–45, 46–47. As part of this contention, Legacy argues that Tuzson’s impeller stage 12 satisfies the means-plus-function limitation of claim 1—specifically arguing that impeller stage 12 performs the same functions as recited in the limitation.

First, Legacy contends that impeller stage 12 necessarily restricts the flow of production fluid, because the chamber below impeller stage 12 is pressurized. Pet. 43; *see id.* at 44 (“Tuzson discloses its inducer screw 22 pressurizes the production fluid to the impeller stage 12, *necessarily* requiring the impeller stage 12 to provide a flow restriction to maintain the pressure drop across the impeller stage 12.”) (emphasis added). Legacy further asserts that “[l]ike Lee ’193, and unlike Lee ’345, the impeller stage 12 of Tuzson does have fluid-flow-restricting passages.” *Id.* at 44; *see also*

id. at 46 ("The skilled artisan knows that the impeller stage 12 necessarily has fluid-flow-restricting passages in order to build pressure entering the impeller stage 12.").

Next, Legacy contends that impeller stage 12 generates a pressure drop in the production fluid. Pet. 43. Legacy argues that the pressure of the production fluid in centrifugal stage 14 is less than the pressure of the fluid in inducer stage 10, because inducer stage 10 pressurizes the fluid above a pressure of the fluid in the well-bore annulus and centrifugal stage 14 is vented to the well-bore annulus. *Id.* at 43–44. Legacy asserts that, because of this pressure differential, there must be a pressure drop across impeller stage 12. *Id.* at 44; *see also id.* at 46 ("The fluid-flow-restricting impeller stage 12 generates a pressure drop in the production fluid as it flows at a higher pressure . . . from the inducer stage 10 to a lower pressure . . . in the separator stage 14.").

Finally, Legacy contends that the impeller stage 12 performs the separating function of the means-plus-function limitation of claim 1. Pet. 44. Legacy argues that impeller stage 12 is a mixed flow impeller and "[b]y definition, a mixed flow impeller imparts a helical flow path to the production fluid and thereby centrifugally splits the gas and liquid components prior to encountering the vortex generator in the separator stage 14." *Id.* (citing Ex. 1010); *see also id.* at 47 ("The skilled artisan understands that Tuzson by passing the pressurized production fluid through . . . mixed flow impeller stage 12, separates gas and liquid entering the separator stage 14 by centrifugally urging heavier liquid-laden production liquid radially outward and the lighter gas-laden production fluid radially inward.").

We find, on the record before us, that Legacy fails to persuade us that Tuzson discloses the recited means of claim 1 and specifically that impeller stage 12 performs the recited functions. First, Legacy fails to support its contention that impeller stage 12 *necessarily* restricts flow because inducer stage 10 increases pressure in a chamber below impeller stage 12. Legacy fails to explain why the pressure of the production fluid does not result from a resistance to flow of the fluid within inducer stage 10, such as by the helical screw 22, inlet 30, or the interior of housing 24—Legacy offers one possible reason for the pressure increase, but fails to demonstrate why the proffered reason is necessarily the case. "To establish inherency, the [] evidence 'must make clear that the missing descriptive matter is necessarily present in the thing described in the reference, and that it would be so recognized by persons of ordinary skill.'" *In re Robertson*, 169 F.3d 743, 745 (Fed. Cir. 1999) (citations omitted). "'Inherency, however, may not be established by probabilities or possibilities. The mere fact that a certain thing may result from a given set of circumstances is not sufficient.'" *Id*.

Next, Legacy's argument that impeller stage 12 functions to generate a pressure drop in the production fluid is also unpersuasive. Legacy's position demonstrates that there is a pressure drop across centrifugal stage 14, not a pressure drop across impeller stage 12. As Halliburton points out, "guide vanes **28** of the impeller stage **12** shown in the figure perform the well-known function of an impeller, which is to pressurize the fluid as it pushes it upstream." Prelim. Resp. 36. Legacy fails to explain adequately why impeller stage 12 does not maintain or increase the pressure of the production fluid leaving inducer stage 10, with the pressure drop occurring

from the point the fluid enters centrifugal stage 14 and exits through passages 46.

Finally, Legacy fails to explain adequately how the impeller of impeller stage 12 constitutes a flow restriction. As Legacy contends, the separation function is accomplished by the rotational motion of impeller stage 12. *See* Pet. 44. Claim 1 requires that the separation function be a result of restricting fluid flow and Legacy fails to explain how the rotational motion restricts flow. Indeed, as Halliburton points out, an impeller pushes fluid through a system—that is, promotes flow rather than restricts flow. *See* Prelim. Resp. 36.

On the record before us, we conclude that Legacy has failed to show a reasonable likelihood of prevailing in its assertion that Tuzson anticipates claim 1. Further, we conclude that Legacy has failed to show a reasonable likelihood of prevailing in its assertion that claims 2–4 and 8, which depend, directly or indirectly, from claim 1, are anticipated by Tuzson.

c. Claims 10–16

Independent claim 10 is a method claim that recites, in relevant part, the step of "generating a pressure drop in said production fluid as said production fluid flows from said first chamber to said second chamber, to separate said gas and said liquid." Ex. 1001, 5:54–56. In supporting its position that Tuzson anticipates claim 10, Legacy relies on its analysis of Tuzson with respect to claim 1, including the means-plus-function claim limitation of claim 1. Pet. 50. Specifically, Legacy references its analysis of the means-plus-function claim limitation of claim 1 for the generating a pressure drop step of claim 10. *See id.* (referencing the analysis of claim 1(c) for claim limitation 10(c)).

As we discussed in connection with our analysis of the means-plus-function claim limitation of claim 1 with respect to Tuzson, we find that Legacy fails to persuade us that Tuzson's impeller stage 12 satisfies the claim limitation, including performing the function of restricting fluid flow to generate a pressure drop in the production fluid as required by claim 1. By merely incorporating its arguments from claim 1, Legacy fails to convince us that impeller stage 12 satisfies the generating a pressure drop step of claim 10, as Legacy fails to explain how the generating a pressure drop step differs from the recited pressure drop function of the means-plus-function limitation of claim 1.

On the record before us, we conclude that Legacy has failed to show a reasonable likelihood of prevailing in its assertion that Tuzson anticipates claim 10. Further, we conclude that Legacy has failed to show a reasonable likelihood of prevailing in its assertion that claims 11–16, which depend, directly or indirectly, from claim 10, are anticipated by Tuzson.

4. Claims 1–4 and 6–17 over Lee '193 and Lee '345

In contending that claims 1–4 and 6–17 of the '215 patent are unpatentable over Lee '193 and Lee '345, Legacy relies, in part, on its contention that Lee '193 discloses certain claim limitations of independent claims 1, 9, 10, and 17. *See* Pet. 51–58. Specifically, Legacy relies on Lee '193 for disclosing 1) the means-plus-function claim limitation of claim 1; 2) the fluid flow restricting bearing housing claim limitation of claim 9; 3) the generating a pressure drop step of claim 10; and 4) the providing a bearing housing with restrictive passages step and the passing the production fluid through the passages step of claim 17. *Id.* at 52–53 (regarding claim

limitation 1(c)), 57 (regarding claim limitation 9(h)), 58 (regarding claim limitations 10(c), 17(b), and 17(e)).

As discussed above in connection with our analysis of independent claims 1, 9, 10, and 17 as anticipated by Lee ’193, we find that Legacy fails to demonstrate that Lee ’193 discloses the recited subject matter relied on by Legacy for this ground. Accordingly, on the record before us, we conclude that Legacy has failed to show a reasonable likelihood of prevailing in its assertion that claims 1–4 and 6–17 are unpatentable over Lee ’193 and Lee ’345.

III. CONCLUSION

For the foregoing reasons, we determine that the information presented in the Petition fails to establish a reasonable likelihood that Legacy would prevail in showing that claims 1–17 of the ’215 patent are unpatentable.

IV. ORDERS

After due consideration of the record before us, it is:

ORDERED that the Petition is *denied* as to all challenged claims and no trial is instituted.

For PETITIONER:

Mitchell K. McCarthy
HALL ESTILL ATTORNEYS AT LAW
mmccarthy@hallestill.com

For PATENT OWNER:

Paul Morico
Thomas Rooney
BAKER BOTTS LLP
paul.morico@bakerbotts.com
thomas.rooney@bakerbotts.com