Trials@uspto.gov
Tel: 571-272-7822

Paper 34
Entered: October 15, 2015

UNITED STATES PATENT AND TRADEMARK OFFICE

BEFORE THE PATENT TRIAL AND APPEAL BOARD

SEOUL SEMICONDUCTOR CO., LTD, and NORTH AMERICA SEOUL SEMICONDUCTOR INC.,
Petitioner,

v.

ENPLAS CORPORATION,
Patent Owner.

Case IPR2014-00878
Patent 8,227,969 B2

Before WILLIAM A. CAPP, JAMES B. ARPIN, and
JEREMY M. PLENZLER, *Administrative Patent Judges*.

PLENZLER, *Administrative Patent Judge*.

FINAL WRITTEN DECISION
35 U.S.C. § 318(a) and 37 C.F.R. § 42.73

I. INTRODUCTION

A. Background

Seoul Semiconductor Co., Ltd. and North America Seoul Semiconductor Inc. (collectively, "Petitioner") filed a Petition to institute an *inter partes* review of claims 1, 2, 5–7, and 10–12 of U.S. Patent No. 8,227,969 B2 (Ex. 1001, "the '969 patent"). Paper 1 ("Pet."). In our Decision on Institution (Paper 11, "Decision to Institute" or "Dec."), we instituted a trial to review the patentability of claims 1, 2, 5–7, and 10–12 based on the following grounds:

References	Basis	Claims
Tetsuo[1] and Kim[2]	§ 103	1, 2, 5, 6, and 12
Tetsuo, Kim, and Yamaguchi[3]	§ 103	10 and 11
Tetsuo and Blieske[4]	§ 103	1, 2, 5–7, and 12
Tetsuo, Blieske, and Yamaguchi	§ 103	10 and 11

Id. at 15–16. Petitioner also provided testimony from Jose Sasian, Ph.D. (Ex. 1003, "the Sasian Declaration").

Subsequent to institution, Enplas Corporation ("Patent Owner") filed a Patent Owner Response (Paper 16, "PO Resp.") and, in support, a declaration from Timothy Drabik, Ph.D. (Ex. 2008, "the Drabik

[1] U.S. Patent App. Pub. No. 2009/0296405 A1, published Dec. 3, 2009 (Ex. 1004, "Tetsuo").
[2] U.S. Patent No. 7,502,558 B2, issued Mar. 10, 2009 (Ex. 1005, "Kim").
[3] U.S. Patent No. 7,348,723 B2, issued Mar. 25, 2008 (Ex. 1006, "Yamaguchi").
[4] U.S. Patent No. 7,368,655 B2, issued May 6, 2008 (Ex. 1007, "Blieske").

Declaration"). Petitioner filed a Reply (Paper 24, "Pet. Reply") to Patent Owner's Response.

An oral hearing was held on July 14, 2015, and a transcript of the hearing is included in the record (Paper 33, "Tr.").

We have jurisdiction under 35 U.S.C. § 6(c). This Final Written Decision is issued pursuant to 35 U.S.C. § 318(a) and 37 C.F.R. § 42.73.

For the reasons that follow, we determine that Petitioner has shown, by a preponderance of the evidence, that claims 1, 2, 5–7, and 10–12 of the '969 patent are unpatentable.

B. Related Proceedings

Petitioner and Patent Owner indicate that they are unaware of any related proceedings. Pet. 5; Paper 6, 1.

C. The '969 Patent

The '969 patent is directed to a display apparatus including a surface light source apparatus having a light emitting apparatus. Ex. 1001, 1:17–18. Figure 5 of the '969 patent, reproduced below, illustrates the display apparatus and the light emitting apparatus.

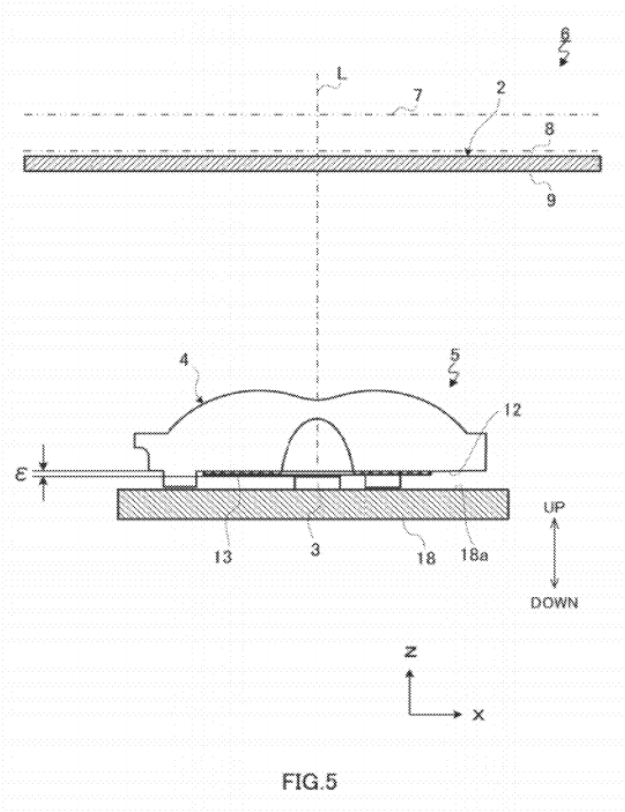

Figure 5 is a cross-sectional view of display apparatus 6.

Display apparatus 6 includes light emitting apparatus 5, which includes light emitting element 3 and light flux controlling member 4. *Id.* at 5:59–60. The ’969 patent explains that when light flux controlling member 4 is attached to substrate 18, gap ε is formed between light emitting element 3 and back surface 12 of light flux controlling member 4. *Id.* at 7:10–13. Light from light emitting element 3 enters gap ε and is incident on back surface 12, resulting in uneven annular luminescence on a surface illuminated by light emitting apparatus 5. *Id.* at 10:20–42. In order to address this uneven annular luminescence, back surface 12 includes grid convex part 13 to scatter light incident on back surface 12. *Id.* at 42–45. Figure 9 of the ’969 patent illustrates grid convex part 13, and is reproduced below.

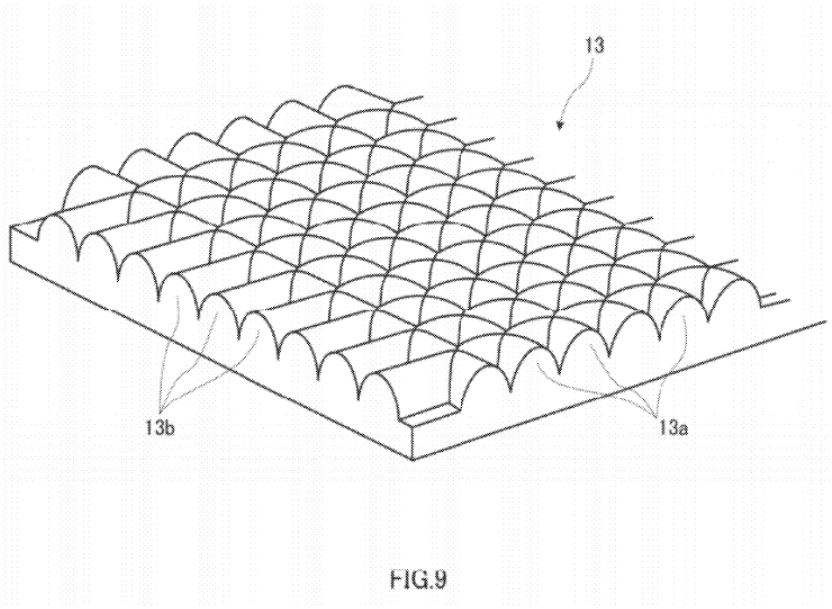

Figure 9 is a fragmentary, perspective view of grid convex part 13.

Grid convex part 13 includes parallel strips of convex parts 13a projecting outward from back surface 12 of light flux controlling member 4 and parallel strips of convex parts 13b projecting outward from back surface 12 of light flux controlling member 4, which are perpendicular to strips of convex parts 13a. *Id.* at 8:35–42. The '969 patent explains that, with this arrangement, "it is possible to scatter light incident on back surface of light flux controlling member 4, in either the vertical direction or the horizontal direction," and that "the illuminance value of the bright part is low compared to the case where back surface 12 is smooth." *Id.* at 9:36–39, 48–49. The '969 patent also provides examples where back surface 12 includes a grid concave part rather than a grid convex part. *Id.* at 16:44–17:19.

D. Illustrative Claim

Claims 1 and 12 are independent, with challenged claims 2, 5–7, 10, and 11 depending from claim 1. Claim 1 is illustrative and is reproduced below:

> 1. A light emitting apparatus comprising:
>
> a light emitting element that is arranged on a substrate and that emits light; and
>
> a light flux controlling member that comprises:
>
> a light control/emission surface that controls a traveling direction of light emitted from the light emitting element;
>
> a concavity that allows a main beam to be incident inside, the main beam being light emitted in a predetermined range of an angle from a reference optical axis serving as a center axis of three-dimensional light fluxes emitted from the light emitting element; and
>
> a back surface that extends in a radial direction from an opening rim part of the concavity and that allows sub-beams to be incident inside, the sub-beams being light other than the main beam emitted from the light emitting element,
>
> wherein one of a grid convex part which arranges a plurality of strips of convex parts in a grid pattern and a grid concave part which arranges a plurality of strips of concave parts in a grid pattern, is formed in the back surface of the light flux controlling member.

Id. at 19:36–58.

II. EVIDENTIARY MATTERS

A. The Sasian Declaration

Patent Owner contends that the Sasian Declaration should be given little or no weight. PO Resp. 36–42.

Patent Owner discusses portions of Dr. Sasian's declarations in a number of *inter partes* reviews, including IPR2014-00605, IPR2014-00878 (this proceeding), and IPR2014-00879, and alleges, generally, that "[i]n each case, Sasian's testimony demonstrates disturbing evidence that rather than offering his own testimony, Sasian is offering testimony written for him by counsel for Petitioners, and adopting practices and procedures that would not be honored by those of skill in the art." *Id.* at 36. Patent Owner describes a number of alleged errors in Dr. Sasian's testimony in IPR2014-00605 and IPR2014-00879. PO Resp. 37–42. With respect to this proceeding, specifically, Patent Owner only alleges that Dr. Sasian's "signature is a piece of graphic text, an electronic image of a signature" and "that he had never seen the cover page of his declaration filed in IPR2014-00878." *Id.* at 40. Because of the alleged errors in the testimony provided in IPR2014-00605 and IPR2014-00879, as well as the signature issue in this proceeding, Patent Owner contends that "[Dr.] Sasian's testimony is neither trustworthy nor credible and should be afforded little if any weight." *Id.* at 42.

In its Reply, Petitioner disputes Patent Owner's allegations. Pet. Reply 15–19.

Patent Owner has not articulated a persuasive reason for giving Dr. Sasian's Declaration, as a whole, little or no weight in our analysis. It is generally understood that some attorney involvement in the preparation of an expert report or declaration is permissible as long as the expert

substantially participated in the preparation thereof, such that it cannot be considered to be "ghost written" by an attorney. *See Manning v. Crockett*, No. 95C3117, 1999 WL 342715, at *3 (N.D. Ill. May 18, 1999); *see also Trigon Ins. Co. v. United States*, 204 F.R.D. 277, 293 (E.D. Va. 2001) (discussing the decision in *Manning*). Patent Owner has not demonstrated persuasively that Dr. Sasian's declaration was "ghost written." *Long Term Capital Holdings v. United States*, No. 01-CV-1290, 2003 WL 21269586, at *4 (D. Conn. May 6, 2003). We may determine the appropriate weight to be accorded the evidence presented, including expert opinion, based on the disclosure of the underlying facts or data, upon which that opinion is based. Thus, we decline to make a determination about Dr. Sasian's opinion, as a whole. Rather, in our analysis we consider, as they arise, relevant portions of Dr. Sasian's testimony and determine the appropriate weight to accord that particular testimony.

B. The Drabik Declaration

Petitioner contends that the Drabik Declaration should be given little weight. Pet. Reply 19–20.

Petitioner contends that "Dr. Drabik identifies no relevant experience or education," and "[d]espite the vast scope of his alleged expertise, Dr. Drabik's declaration identifies no relevant experience in non-imaging optics, illumination optics, or even lenses in general." *Id.* at 19.

As with Dr. Sasian's opinion, we decline to make a determination as to Dr. Drabik's opinion, as a whole. As noted above, we have the discretion to determine the appropriate weight to be accorded to the evidence presented, including expert opinion, based on the disclosure of the underlying facts or data upon which the opinion is based. Thus, as with Dr.

Sasian's testimony, in our analysis, we consider relevant portions of Dr. Drabik's testimony, as they arise, and determine the appropriate weight to accord that particular testimony.

III. ANALYSIS

A. Claim Construction

We construe all terms, whether or not expressly discussed here, using the broadest reasonable interpretation in light of the '969 patent Specification. *See* 37 C.F.R. § 42.100(b); *see also In re Cuozzo Speed Techs., LLC*, 793 F.3d 1268, 1278–80 (Fed. Cir. 2015) ("Congress implicitly approved the broadest reasonable interpretation standard in enacting the AIA," and "the standard was properly adopted by PTO regulation."). Applying that standard, we interpret the claim terms of the '969 patent according to their ordinary and customary meaning in the context of the patent's written description. *See In re Translogic Tech., Inc.*, 504 F.3d 1249, 1257 (Fed. Cir. 2007). An inventor is entitled to be his or her own lexicographer of patent claim terms by providing a definition of the term in the specification with reasonable clarity, deliberateness, and precision. *In re Paulsen*, 30 F.3d 1475, 1480 (Fed. Cir. 1994). In the absence of such a definition, however, limitations are not to be read from the specification into the claims. *In re Van Geuns*, 988 F.2d 1181, 1184 (Fed. Cir. 1993).

Each of claims 1 and 12 recites "a light control/emission surface." We determine that "light control emission/control surface" is the only term requiring an express construction in order to conduct properly our analysis of the applied art.

Patent Owner contends that "[t]his term, light control/emission surface is not a term of art," and "[w]here a patentee coins a new term to describe his invention, and then refers to and describes that term in the exact same character each time it is used, the patentee is acting as his own lexicographer." PO Resp. 19. Accordingly, Patent Owner contends that the "light control/emission surface" recited in the claims requires "a three-part surface having elements 11a, 11b and 11c with the shape attributed to each" shown in Figure 7A and described at column 7, lines 20–42, of the '969 patent. *Id.* at 22–25.

Petitioner responds that the '969 patent does not provide a lexicographical definition for the "light control/emission surface," and, instead, "merely describes an embodiment of a light control/emission surface." Pet. Reply 2. Petitioner proposes that we construe this term in the manner stated in our Decision to Institute (Pet. Reply 4 (citing Dec. 7)), where we construed the term "as only requiring a 'surface that controls a traveling direction of light emitted from the light emitting element'" (Dec. 7). We agree with Petitioner.

Patent Owner has failed to persuade us that the cited portions of the Specification of the '969 patent provide a definition of this term with reasonable clarity, deliberateness, and precision. Although the Specification of the '969 patent provides the example of light control/emission surface 11 including first, second, and third emission surfaces 11a, 11b, 11c (Ex. 1001, 7:20–42), Patent Owner fails to identify anything in the Specification indicating that these three emission surfaces are required for the claimed "light control/emission surface." The initial discussion of light controlling emission surface 11 states that "light controlling emission surface 11

controls the emission direction to emit light which is emitted from light emitting element 3 and which is incident inside light flux controlling member 4," without imposing any requirement that light controlling emission surface 11 includes first, second, and third emission surfaces 11a, 11b, 11c. *Id.* at 6:43–46.

Rather than limiting the scope of the patent to the specific embodiments described therein, the '969 patent explicitly states that "[t]he above explanation is an illustration of preferable embodiments of the present invention, and the scope of the present invention is not limited to these." Ex. 1001, 18:53–55. At oral hearing, when asked how this language impacts the alleged lexicographical definition of "light controlling emission surface," Patent Owner acknowledged that "of course it applies" to the "light controlling emission surface." Tr. 47:10–48:6. Patent Owner proceeded to explain, however, that "many of [the claim elements] will vary with respect to size, with respect to completeness of function" and "[t]here are lots of variations within the very clear terms of claim 1 or claim 12 or the dependent claims," but "you only have one coined term in this patent . . . There are no other terms that are unique, that are defined, that are illustrated differently." *Id.* at 48:3–6, 11–13.

Patent Owner's contentions regarding the "light control/emission surface" recited in claims 1 and 12 having no special meaning in the art (*see, e.g.*, PO Resp. 24–25) are unavailing. As noted above, the "light controlling emission surface" discussed in the Specification of the '969 patent is described simply as a surface of the light flux controlling member that controls a light emission direction. Ex. 1001, 6:43–46. We are not persuaded that the term was intended for anything more than to distinguish

the various surfaces of the light flux controlling member from one another. For example, when the light flux controlling member is a lens, the light flux controlling member is simply the outer surface of the lens opposite the back surface and concavity on the lens. *Id.* at 6:19–57.

For the reasons set forth above, we are not apprised of sufficient reason to depart from our construction of "light control/emission surface" set forth in our Decision to Institute. Accordingly, we conclude that the broadest reasonable interpretation of "light control/emission surface" is a surface of the light flux controlling member that controls a traveling direction of light emitted from the light emitting element, as recited in claim 1.

B. Obviousness over Tetsuo and Kim – Claims 1, 2, 5, 6, and 12

Petitioner contends that the subject matter of claims 1, 2, 5, 6, and 12 would have been obvious over Tetsuo and Kim. Pet. 25–41. We have reviewed the Petition, the Patent Owner Response, and Petitioner's Reply, as well as the relevant evidence discussed in those papers. We are persuaded that the subject matter of claims 1, 2, 5, 6, and 12 would have been obvious over Tetsuo and Kim. The parties' dispute focuses on the "light control/emission surface" and the "grid pattern . . . formed on the back surface of the light flux controlling member" recited in claims 1 and 12. Patent Owner does not address specifically Petitioner's contentions with respect to the other limitations recited in claims 1 and 12, or those recited in dependent claims 2, 5, and 6.

1. "light control/emission surface"

Initially, we note that Petitioner contends that Tetsuo teaches the majority of the limitations recited in claims 1 and 12, including the "light

control/emission surface." *See* Pet. 25–31. With respect to this limitation, Petitioner cites second lens surface 122 on Tetsuo's spread lens 120 (*id.* at 26–27), which is illustrated in Figure 5 of Tetsuo, reproduced below.

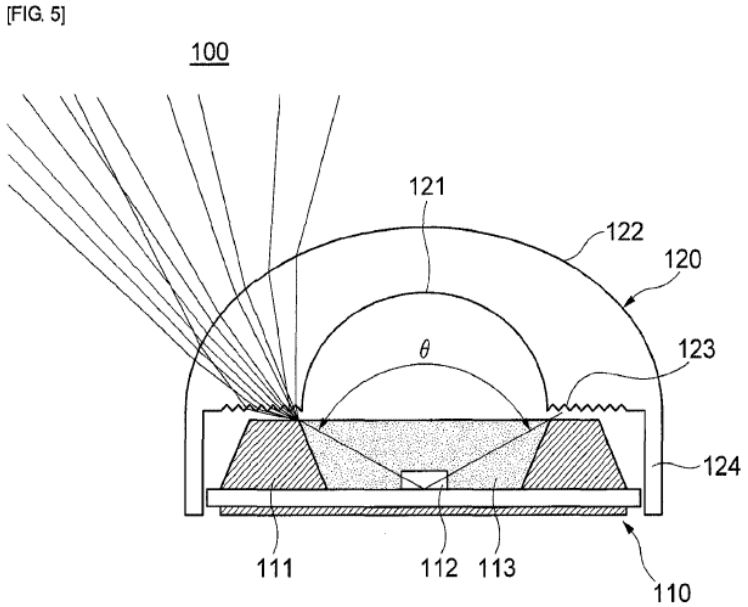

Figure 5 of Tetsuo is cross-sectional view of a light emitting device assembly including spread lens 120. Tetsuo explains that "second lens surface 122 spread[s] the light inputted through the first lens surface 121 to an outside." Ex. 1004 ¶ 34.

Patent Owner argues that Tetsuo "does not disclose the claimed limitation 'light control/emission surface' nor its novel features" because it "is directed entirely to a spread lens having a smooth round outer lens surface that is concave when viewed from the point of view of the light emitter." PO Resp. 26. Patent Owner's arguments are unpersuasive because they are based on its overly narrow proposed construction of "light control/emission surface," which we do not adopt for the reasons discussed above.

2. "grid pattern . . . formed on the back surface of the light flux controlling member"

Each of claims 1 and 12 further requires "a grid convex part which arranges a plurality of strips of convex parts in a grid pattern" or "a grid concave part which arranges a plurality of strips of concave parts in a grid pattern" on the back surface of the light flux controlling member.

With respect to this limitation, Petitioner notes that "[t]he back surface of Tetsuo's light controlling member (120) includes 'refraction parts which extend between both side ends of each of the first and second lens surfaces [and] are formed in a convex-concave shape'" (Pet. 29 (quoting Ex. 1004 ¶ 18)), and that "Tetsuo provides examples for the convex-concave shape including 'a V shape, a lozenge shape, and a cone shape'" (*id.* (quoting Ex. 1004 ¶ 19)). Tetsuo's refraction parts 123 are illustrated in Figure 5, reproduced above. Petitioner acknowledges that, "[a]lthough Tetsuo discloses forming the convex-concave refraction parts as a V shape, a lozenge shape, or a cone shape, Tetsuo does not expressly state how those shapes are arranged two-dimensionally on the back surface." *Id.* at 30–31. The parties' dispute with respect to this limitation focuses on whether it would have been obvious to arrange Tetsuo's refraction parts in a grid pattern.

Petitioner contends that Kim teaches a grid pattern as one known way to arrange optical elements on the back of a light flux controlling member. *Id.* at 33 (citing Ex. 1003 ¶¶ 32–33). Petitioner contends that one skilled in the art would have needed to select an arrangement for Tetsuo's refraction parts, and would have considered the grid pattern taught by Kim to be one obvious option. *Id.* Petitioner reasons, for example, that it would have been

obvious to one skilled in the art to use a grid pattern to arrange the refraction parts on the back of Tetsuo's light flux controlling member because "Kim also identifies specific benefits from providing a grid of horizontal and perpendicular grooves between optical elements on the light incoming side of a lens" including "uniform output brightness from the light flux controlling member," which would have been beneficial to the arrangement in Tetsuo. *Id.* at 33–34 (citing Ex. 1005, 2:35–37; Ex. 1004 ¶¶ 6–7).

Patent Owner responds with general allegations of "teaching away" and "impermissible hindsight," but does not explain persuasively why one skilled in the art would have been discouraged from the proposed modification or why it was based solely on the disclosure of the '969 patent. PO Resp. 27–30. For example, Patent Owner alleges, generally, that "Petitioners' position requires one of skill in the art to 'disassemble the single lens of Kim' at the point of novelty of the Claims, to provide a surface taught away from by Tetsuo, which employs a different type of surface." *Id.* at 28.

Patent Owner presents additional arguments focusing on the specific lens arrangement in Kim without addressing why one skilled in the art would not have modified the arrangement of Tetsuo's refractive parts based on Kim's grid pattern. *Id.* at 27–31. For example, Patent Owner contends that "even if one were to make the improper combination, it would not improve the performance of Tetsuo" because "the converging fly-eye lenses of Kim . . . would result in uneven distribution due to their focusing of the light in specific areas."[5] *Id.* at 29.

---

[5] These contentions appear to address Petitioner's alternate proposed modification, that one skilled in the art "would have considered adopting not

With respect to using a grid pattern to arrange Tetsuo's refraction parts, Patent Owner contends that "Tetsuo clearly shows that projections 123 are distributed in an annular fashion" and "one of skill in the art would not need to turn to Kim and find an alternate distribution." *Id.* at 29–30 (citing Ex. 2008 ¶ 63). We are not persuaded that Tetsuo discloses any particular arrangement for its refraction parts, as Patent Owner contends. The portion of Dr. Drabik's testimony cited by Patent Owner in support of this contention alleges, based only on the drawings in Tetsuo, that "two arrangements of refraction parts that would occur naturally—and trivially—to a PHOSITA seeking to follow the teaching of Tetsuo" are "an arrangement of annular grooves" and "cone features disposed in concentric circular rings." Ex. 2008 ¶ 63. We are not persuaded that one skilled in the art would read Tetsuo as clearly showing its refraction parts arranged in an annular fashion, as Patent Owner contends. Patent Owner identifies nothing in Tetsuo's written description that would lead to such a conclusion. The drawings relied upon appear to be schematic in nature, and also could illustrate a cross-section of a grid pattern for the refraction parts.

Moreover, even if Tetsuo explicitly disclosed an annular arrangement for its refraction parts, we are not persuaded that one skilled in the art would not have looked to alternate arrangements for the refraction parts. *See* Ex.

---

only the arrangement of optical elements disclosed in Kim, but also the shape of those optical elements" because that arrangement "would result in improved illumination uniformity as discussed above as well as improved processibility and productivity." *Id.* at 35 (citing Ex. 1005, 3:61–65). We need not reach Petitioner's alternative contentions regarding the shape of the optical elements in Kim because we are persuaded by Petitioner's contentions regarding arranging Tetsuo's refraction parts in a grid pattern.

1016 ¶ 17. Patent Owner does not identify any reason why Tetsuo requires annular grooves or concentric circular rings for its arrangement of refraction parts. As noted above, Petitioner contends that employing a grid pattern, as taught by Kim, would provide uniform illumination, and that uniform illumination is a benefit in Tetsuo. Pet. 33–34. Patent Owner contends that, in Kim, "the two lens surfaces work together to collect and focus the light," rather than "uniformly distribut[ing] light over a broad area." PO Resp. 28. As Petitioner points out, however, "the two surfaces have two distinct functions **(1)** the fly-eye lens provides uniformity and **(2)** the other provides convergence." Pet. Reply 8. Petitioner proposes arranging Tetsuo's refraction parts based on the grid pattern from Kim's fly-eye lens, not applying the two lens surfaces from Kim. Pet. 32–33. Kim explains that fly-eye lens 21 formed by the grid of lens cells 23 "makes uniform the intensity of the light emitted from the light source 10." Ex. 1005, 2:35–37.

In its Response, Patent Owner further contends that "[t]he object of Tetsuo is not to provide more even or more uniform illumination" (*id.* at 9 (citing Ex. 2008 ¶¶ 57–58)), and that "[o]ne of skill in the art would understand that Tetsuo teaches providing light in a specific area by means of refractive features 123, as opposed to providing that light uniformly across the spread lens of Tetsuo." *Id.* at 11 (citing Ex. 2008 ¶ 55). Patent Owner later acknowledges in its Response, however, that "Tetsuo is directed to . . . using a 'spread lens' to uniformly distribute light over a broad area despite its miniaturization." *Id.* at 28 (citing Ex. 2008 ¶¶ 79–82). We agree with Petitioner's explanation at oral hearing that

> [o]ne of the ways that light is made more uniform is by taking light that has been lost at the outer edge and replacing it, taking the light that has been lost because it has not been directed

> properly at the outer edge, if it is a flat surface, and use the grooves and refraction pattern to direct that light upwards.

Tr. 54:1–6. Tetsuo addresses providing more uniform illumination in this manner, explaining that "the light emitted from the light emitting device 112 is refracted and full-reflected by the refraction part 123 of the spread lens 120, thereby improving luminance in the range in which light luminance is lowered by miniaturization and slimness." Ex. 1004 ¶ 50.

Patent Owner's additional contentions regarding the differing applications for the lenses described in Tetsuo and Kim also are unpersuasive. *See* PO Resp. 30. Patent Owner does not dispute that both references are directed to using lenses to control emitted light, instead, Patent Owner asserts that the references involve different applications for lenses.

For the reasons set forth above, we are persuaded that Petitioner has shown, by a preponderance of the evidence, that the subject matter of claims 1, 2, 5, 6, and 12 of the '969 patent would have been obvious over the combination of Tetsuo and Kim.

C. Obviousness over Tetsuo, Kim, and Yamaguchi – Claims 10 and 11

Claims 10 and 11 depend from claim 1, and Patent Owner does not dispute specifically Petitioner's contentions with respect to these claims, other than arguing that the addition of Yamaguchi to the combination of Tetsuo and Kim does not cure alleged deficiencies in the challenge to claim 1. *See* PO Resp. 11–12. As noted above, we are not persuaded of deficiencies in Petitioner's challenge to claim 1.

Based on our review of the argument and evidence supporting Petitioner's challenge to claims 10 and 11 (*see* Pet. 41–44 (citing, *e.g.*, Ex.

1006, Figs. 9A–9F, 9:40–44, 9:56–57, 10:23–26; Ex. 1003 ¶¶ 49–50)), we are persuaded that Petitioner has established, by a preponderance of the evidence, that the subject matter of claims 10 and 11 would have been obvious over the combination of Tetsuo, Kim, and Yamaguchi.

D. Obviousness over Tetsuo and Blieske – Claims 1, 2, 5–7, and 12

Petitioner contends that the subject matter of claims 1, 2, 5–7, and 12 would have been obvious over Tetsuo and Blieske. Pet. 45–55. We have reviewed the Petition, the Patent Owner Response, and Petitioner's Reply, as well as the relevant evidence discussed in those papers. We are persuaded that the subject matter of claims 1, 2, 5–7, and 12 would have been obvious over Tetsuo and Blieske. The parties' dispute focuses on the "light control/emission surface" and the "grid pattern . . . formed on the back surface of the light flux controlling member" recited in claims 1 and 12. Patent Owner does not address specifically Petitioner's contentions with respect to the other limitations recited in claims 1 and 12, or those recited in dependent claims 2 and 5–7.

1. "light control/emission surface"

Patent Owner does not address Petitioner's contentions regarding this limitation other than stating, generally, in a section title "Tetsuo Taken in View of Kim," that "Tetsuo does not disclose a light flux control element with the profile set forth for the light control/emission surface of the claims of the '969 Patent as recited at Col. 7, ll. 20–42," and that "Blieske does not disclose a light flux control element with the profile set forth for the light control/emission surface of the claims of the '969 Patent as recited at Col. 7, ll. 20–42." PO Resp. 8. To the extent we consider this an argument directed

to the combination of Tetsuo and Blieske, it is unpersuasive because the claim does not require the specific profile described in the Specification of the ’969 patent, as explained above.

2. “grid pattern . . . formed on the back surface of the light flux controlling member”

With respect to this limitation, Petitioner again cites Tetsuo’s discussion of refraction parts 123 formed on the back surface of spread lens 120, and acknowledges that Tetsuo does not state expressly how refraction parts 123 are arranged two-dimensionally. Pet. 45 (citing Ex. 1004 ¶¶ 18–19). Again, the focus of the dispute is whether it would have been obvious to arrange Tetsuo’s refraction parts in a grid pattern.

Petitioner contends that “Blieske discloses a light flux controlling member in the form of a ‘textured transparent panel placed near an element capable of . . . emitting light’” and “discloses providing optical elements on the surface of a light flux controlling member in a grid of convex or concave strips.” Pet. 46, 48 (citing Ex. 1007, Fig. 3, Abstract, 4:40–46; Ex. 1003 ¶¶ 54–56). Petitioner reasons that “[a] person having ordinary skill in the art would have had reason to look to the disclosures of Blieske regarding the arrangement and shape of optical features to implement the refraction parts of Tetsuo” because the “arrangement provided by Blieske includes the provision of uniform illumination.” *Id.* at 48 (citing Ex. 1007, 6:62–66; Ex. 1003 ¶¶ 57–58). Petitioner cites “desirability of uniform illumination” in Tetsuo, as discussed above relative to the challenge based on the combination of Tetsuo and Kim. *Id.*

Patent Owner initially responds that, “[t]o modify a reference at its point of novelty to defeat a claim of a U.S. Patent requires a clear and strong

teaching to do so," and alleges that it is "Petitioner['s] position that it would be obvious to replace that novel feature of Tetsuo with the grid of Blieske, [which], once again relies on hindsight to combine incompatible teachings with no motivation to even try to do so in the first place." PO Resp. 33; *but see* Pet. Reply 12. Petitioner additionally contends that it "did not urge that a person of ordinary skill in the art would have removed the projections of Tetsuo, but instead unambiguously asserted that it would have been obvious to implement the projections of Tetsuo based on the teachings of Blieske." *Id.* at 13 (citing Pet. 48). We agree with Petitioner. As noted above, Tetsuo is silent as to the specific arrangement of its refraction parts, and Petitioner proposed using the grid pattern taught in Blieske to arrange Tetsuo's refraction parts. Pet. 48. As further discussed above, Tetsuo addresses uniform illumination, and we are persuaded that the grid arrangement taught by Blieske is consistent with this goal. *See* Ex. 1007, 6:64–66 ("the panel according to the invention is placed in front of a light source and its function is to make the luminance uniform").

Patent Owner contends that "Blieske does not teach or suggest application of the taught panels to lenses of any kind." PO Resp. 33. As Petitioner notes (Pet. Reply 13), however, "if a technique has been used to improve one device, and a person of ordinary skill in the art would recognize that it would improve similar devices in the same way, using the technique is obvious unless its actual application is beyond that person's skill" (*KSR Int'l Co. v. Teleflex Inc.*, 550 U.S. 398, 417 (2007)). Blieske describes an optical diffuser "to make the luminance uniform." Ex. 1007, 6:62–66. We are persuaded that one skilled in the art would have found the teachings of Blieske relevant when determining how to arrange Tetsuo's refractive parts,

particularly where Tetsuo is interested in providing uniform illumination, as discussed above.

Patent Owner additionally presents arguments regarding using Blieske's diffuser with the lens of Tetsuo, but these arguments are unpersuasive because Petitioner proposes arranging Tetsuo's refractive parts based on Blieske's teachings, not adding Blieske's diffuser to Tetsuo's system. *See* Pet. 48; Pet. Reply 13–14.

For the reasons set forth above, we are persuaded that Petitioner has shown, by a preponderance of the evidence, that the subject matter of claims 1, 2, 5–7, and 12 of the '969 patent would have been obvious over the combination of Tetsuo and Blieske.

E. Obviousness over Tetsuo, Blieske, and Yamaguchi – Claims 10 and 11

Claims 10 and 11 depend from claim 1. Patent Owner does not respond fully to Petitioner's contentions regarding claims 10 and 11. Patent Owner's arguments address why it would not have been obvious to use two diffusers with Tetsuo's lens (*see* PO Resp. 35), while Petitioner's challenge does not propose such an arrangement (*see* Pet. 56–58; Pet. Reply 14–15).

Based on our review of the argument and evidence supporting Petitioner's challenge to claims 10 and 11 (*see* Pet. 56–58 (citing, *e.g.*, Ex. 1006, Figs. 9A–9F, 9:40–44, 9:56–57, 10:23–26; Ex. 1003 ¶¶ 71–72)), we are persuaded that Petitioner has established, by a preponderance of the evidence that the subject matter of claims 10 and 11 would have been obvious over the combination of Tetsuo, Blieske, and Yamaguchi.

IV. MOTION TO EXCLUDE

Patent Owner seeks to exclude the Sasian Declaration (Ex. 1003) in its entirety. Paper 27, 2 ("Mot."). Specifically, Patent Owner's Motion is based "on the grounds that Petitioner's counsel Michael Eisenberg deliberately interfered with the questioning of Declarant Jose Sasian to prevent effective cross-examination," and therefore, "no cross-examination is effectively possible," making the declaration inadmissible hearsay under FRE 801–802. *Id.*; *see Office Patent Trial Practice Guide*, 77 Fed. Reg. 48,756, 48,772 (Aug. 14, 2012)

Petitioner responds that the objections were untimely, citing 37 C.F.R. § 42.64(b)(1), which requires that any objection to evidence submitted during a preliminary proceeding (e.g., the Sasian Declaration) must be served within ten business days of the institution of the trial. Paper 30, 1. Patent Owner does not dispute that the objections were untimely in view of the rule, but submits that the objections did not arise until Dr. Sasian's cross-examination and that "an objection cannot be raised until the evidence that supports it becomes evident. *Stanton v. Dahlen*, 2005 WL 596769[, at] *2 (BPAI [2005])." Paper 31, 3. Nevertheless, the Board's decision on motion in the interference case of *Stanton v. Dahlen* does not stand for the proposition that an objection cannot be raised until the evidence that supports it becomes apparent; the decision merely paraphrased an argument from counsel. *Stanton v. Dahlen*, 77 USPQ2d 1415, 1416 (BPAI 2005) (unpublished).

Patent Owner alleges that "[n]otice was given during the attempted cross-examination" of Dr. Sasian on January 8, 2015.[6] Mot. 2. The Decision to Institute, however, issued more than two months earlier, on October 30, 2014. Patent Owner has failed to identify a timely objection to the Sasian Declaration. Accordingly, Patent Owner's Motion is *dismissed* as untimely.

V. SUMMARY

We are persuaded that Petitioner has demonstrated, by a preponderance of the evidence, that claims 1, 2, 5–7, and 10–12 of the '969 patent are unpatentable.

VI. ORDER

For the reasons given, it is

ORDERED that claims 1, 2, 5–7, and 10–12 of the '969 patent are unpatentable;

FURTHER ORDERED that Patent Owner's Motion to Exclude the Sasian Declaration (Ex. 1003) is *dismissed*; and

FURTHER ORDERED that parties to the proceeding seeking judicial review of this Final Written Decision must comply with the notice and service requirements of 37 C.F.R. § 90.2.

---

[6] Patent Owner's Motion appears to reference Exhibit 2004, which is the cross-examination deposition of Dr. Sasian in IPR2014-00605, in error.

For PETITIONER:

Michael B. Eisenberg
David W. Wallace
michael.eisenberg@hklaw.com
david.wallace@hklaw.com

For PATENT OWNER:

Mark R. Labgold, Ph.D.
Steven Kelber
Patrick J. Hoeffner
mlabgold@labgoldlaw.com
sbkelber@aol.com
phoeffner@labgoldlaw.com