Trial@uspto.gov
571-272-7822

Paper 36
Date Entered: June 22, 2015

UNITED STATES PATENT AND TRADEMARK OFFICE

BEFORE THE PATENT TRIAL AND APPEAL BOARD

FORD MOTOR COMPANY
Petitioner

v.

TMC FUEL INJECTION SYSTEM, LLC
Patent Owner

Case IPR2014-00272
Case IPR2014-00273
Patent 7,318,414 B2

Before BRIAN J. McNAMARA, TINA E. HULSE, and JAMES A. WORTH, *Administrative Patent Judges*.

Opinion for the Board filed by *Administrative Patent Judge* JAMES A. WORTH.

Opinion Concurring filed by *Administrative Patent Judge* BRIAN J. McNAMARA.

WORTH, *Administrative Patent Judge*.

FINAL WRITTEN DECISION
35 U.S.C. § 318(a) and 37 C.F.R. § 42.73

I. INTRODUCTION

Ford Motor Company ("Petitioner") filed two Petitions for *inter partes* review of claims 38 and 40 of U.S. Patent No. 7,318,414 B2 ("the '414 Patent"). Corrected Petition, Paper 5 (IPR2014-00272) ("272 Pet." or "Pet.");[1] Corrected Petition, Paper 6 (IPR2014-00273) ("273 Pet."). TMC Fuel Injection System, LLC ("Patent Owner") did not file a Patent Owner Preliminary Response. We determined that the information presented in both Petitions demonstrated a reasonable likelihood that Petitioner would prevail with respect to claims 38 and 40. Pursuant to 35 U.S.C. § 314, we instituted trial as to those claims. Paper 10 (IPR2014-00272) ("272 Dec. Inst."); Paper 12 (IPR2014-00273) ("273 Dec. Inst."). Given the overlap in challenged claims and prior art, we consolidated IPR2014-00273 with IPR2014-00272. Paper 12 (IPR2014-00272); Paper 13 (IPR2014-00273).

After institution of trial, Patent Owner filed a Patent Owner Response (Paper 20, "PO Resp.") and a Contingent Motion to Amend (Paper 21, "Mot. Amend"). Petitioner filed a Reply to Patent Owner's Response (Paper 23, "Pet. Reply") and an Opposition to Patent Owner's Contingent Motion to Amend (Paper 24). Patent Owner filed a Reply in Support of its Motion to Amend (Paper 25).

Patent Owner filed a Motion to Exclude (Paper 27, "PO Mot. Exc."), to which Petitioner filed an Opposition (Paper 29, "Pet. Oppn Mot. Exc.") and Patent Owner filed a Reply thereto (Paper 32, "PO Reply Mot. Exc.").

[1] Unless otherwise noted, citations refer to papers and exhibits docketed under IPR2014-00272. Papers and exhibits originally docketed under IPR2014-00273 (i.e., prior to consolidation), will be notated with "IPR2014-00273" or "273" with the paper and exhibit designation.

An oral hearing was held on April 13, 2015, a transcript of which has been entered in the record. Paper 35 ("Tr.").

We have jurisdiction under 35 U.S.C. § 6(c). This Final Written Decision is issued pursuant to 35 U.S.C. § 318(a) and 37 C.F.R. § 42.73.

For the reasons that follow, we determine that Petitioner has not shown by a preponderance of the evidence that claims 38 and 40 of the '414 patent are unpatentable.

A. Related Proceedings

Patent Owner has asserted the '414 patent against Petitioner in the co-pending case, *TMC Fuel Injection System, LLC v. Ford Motor Co.*, No. 2:12-cv-04971-NS (E.D. Pa.). Pet. 1; Ex. 1002.

B. The '414 patent (Ex. 1001)

The '414 Patent relates to a system for supplying fuel to an assembly of fuel injectors (which in turn supply fuel to an engine). *See* Ex. 1001, 1:7–8. Fuel is generally supplied from a fuel tank to the fuel injectors along a main fuel line by the action of a fuel pump. *Id.* at 2:12–16. The '414 patent discloses two possible additional fuel lines, i.e., a first additional fuel line and a second additional fuel line, both collateral to the main fuel line, that can return fuel to the fuel pump. *See id.* at 5:41–45, Fig. 1, Fig. 2.

The first additional fuel line, which the Specification refers to as a "fuel by-pass" line, can be opened and closed to create a dual-pressure system. *See id.* at 6:17–8:33 ("A. Basic Fluid System that Creates Dual-Pressure Instantly"), Fig. 1. Figure 1 of the '414 patent is reproduced below:

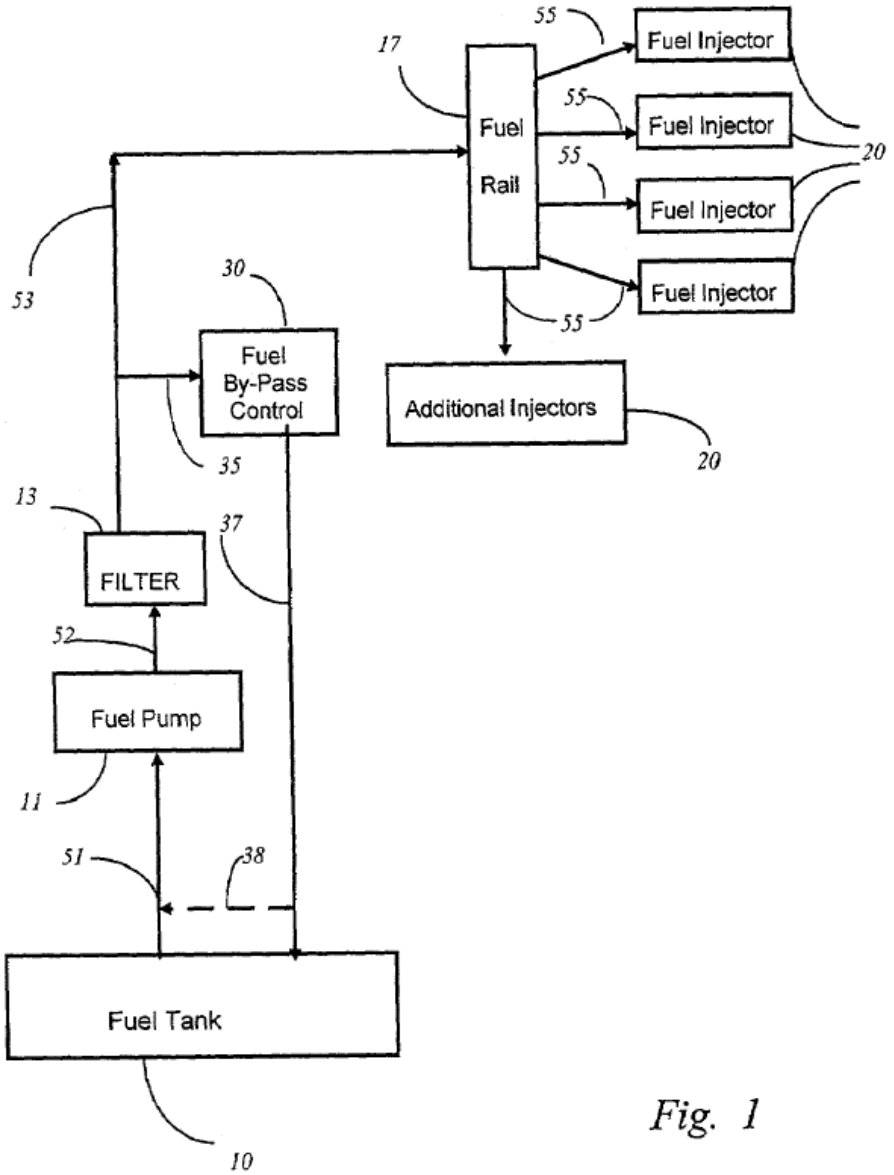

Fig. 1

Figure 1 depicts the fuel-bypass line, which includes at least line 35, by-pass control 30, and line 37. *Id.* at 8:41–45. The fuel-bypass line is intended to be closed during most driving conditions in order to create a high pressure fuel system to optimize the injection of fuel to the engine. *Id.* at 6:36–37, 6:59–62. However, when certain flow conditions are met, e.g., when the car is idling and engine demand falls, the fuel-bypass line can be opened to create a lower pressure fuel system. *Id.* at 7:13–16, 7:43–55, Fig.

5. In this manner, the fuel by-pass can increase fuel efficiency. *Id.* at 1:28–32, 2:7–10, 4:3–5, 4:15–17. The '414 patent discloses the use of a "constraint on the fuel-by-pass line to obtain the lowest fuel pressure P_L which accomplishes the fuel spraying properly and allows the engine still to run smoothly." *Id.* at 7:20–23. "For example, one may choose the size of the fuel by-pass lines 35, 37, 38 so that they provide proper flow resistance or introduce a restriction by other means. For those familiar with fluid control, the means include, but are not limited to, using a needle valve or a diaphragm-like plate with a hole that has a proper diameter for fuel restriction." *Id*. at 6:43–48. The by-pass line is opened or closed "manually by flipping a control switch" or "using an embedded controller where an electronic signal is sent to activate a control circuit which activates the actuator of the fuel by-pass control switch," according to a logic decision illustrated by the flow charts of Figures 5 and 6. *Id.* at 7:26–30.

The second additional fuel line, which the Specification refers to as a "fuel-return" line, stabilizes the pressure in the system "using the same principle" as for the fuel by-pass line. *See id.* at 8:35–9:19 ("B. Fuel-Return Line for Fuel Pump Stabilization, Temperature Stability in Fuel Tank, and Delivering an Instant Excess Power On-Demand").[2] The fuel-return includes at least line 31, fuel-return-control 32, and line 33. *Id.* at 8:41–45. The fuel-return line is intended to be open during most driving conditions. *Id.* at 8:41–43, Fig. 2. The Specification discloses that the fuel-return line can also be closed for a momentary pressure boost. *Id.* at 8:42–43; 9:1–12. Thus, the amount of fuel through fuel-return may be adjusted to obtain

[2] The Specification does not contain a drawing with the fuel-return line as the only additional fuel line.

different high pressure P_H as shown in FIG. 3 where two linear lines represent two different pressures. *Id.* at 8:49–51. Fuel-return-control 32 can be an electromechanical valve, which may be controlled manually or electronically by using a microprocessor or an embedded controller to exert an "Off/On" action. *Id.* at 8:46–48, 9:13–14.

Figure 2 of the '414 patent is reproduced below:

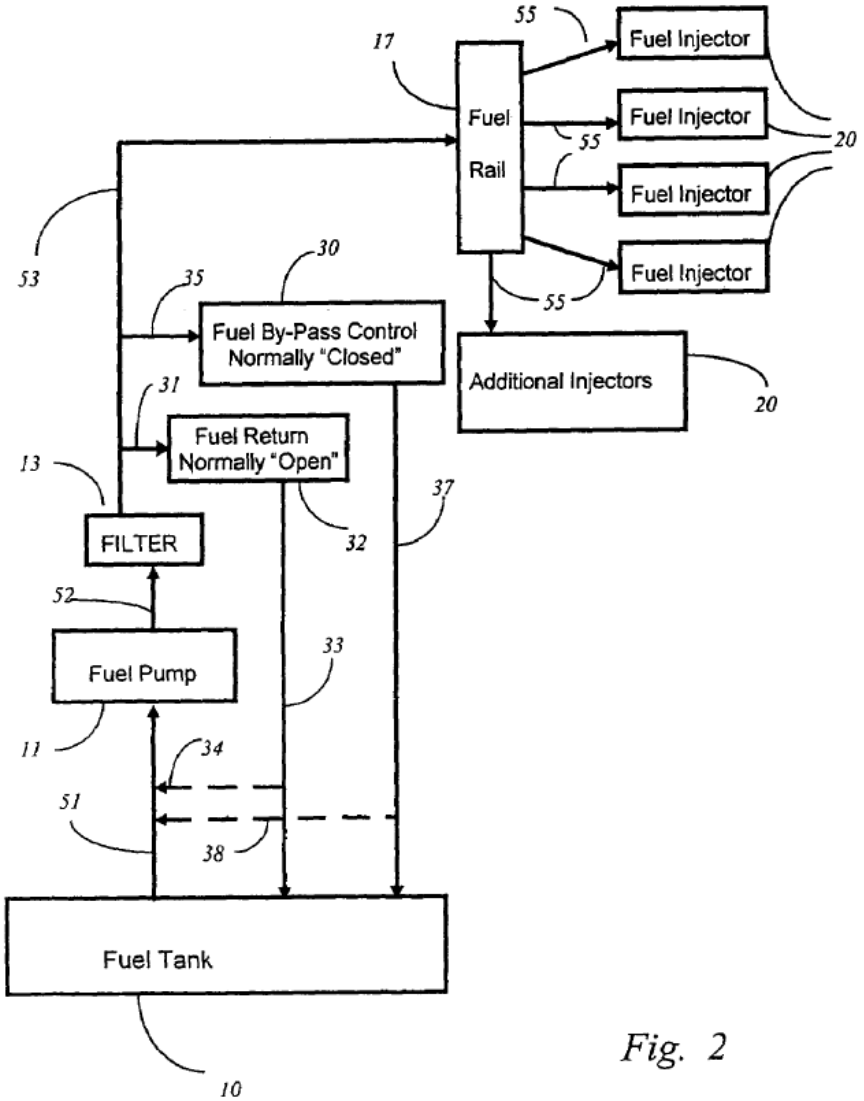

Fig. 2

Figure 2 depicts a preferred embodiment that uses both a first additional fuel line and a second additional fuel line. *See id.* at 9:35–53 ("C. Fuel Injection System that Incorporates Both Inventive Features").

C. Claims 38 and 40

Claims 38 and 40 are independent claims. Claim 38 is illustrative and is reproduced below:

> 38. A fuel injection system for delivering pressurized fuel from a fuel supply to fuel injectors of an engine which uses a fuel recirculation loop to minimize or eliminate the need of a hot fuel return line and a low pressure regulator comprising:
>
> a fuel supply,
>
> a fuel rail in fluid communication with at least one fuel injector,
>
> a fuel pump having an outlet and an inlet, the inlet being connected to the fuel supply and driven at a substantially constant speed,
>
> a main fuel supply line connected from the outlet of the fuel pump to the fuel rail in fluid communication with the at least one fuel injector,
>
> a fuel return path with flow constraint, connected from some location in the main fuel supply line, including the outlet of the fuel pump, avoiding fuel rail to some location in the fuel supply including the inlet of the fuel pump, allowing fuel recirculation to stabilize the pump operation, and creating stable fuel pressure.

Claim 40 is substantially similar to claim 38, but further recites a flow constraint "provided by an orifice of predetermined diameter."

D. Grounds of Unpatentability Instituted for Trial

We instituted a consolidated trial based on the following grounds of unpatentability, each challenging claims 38 and 40:

Originating Case	Basis	References
IPR2014-00273	§ 102	Tuckey[3]
IPR2014-00273	§ 103	Tuckey and Ford '479[4]
IPR2014-00272	§ 103	Tuckey and Chih[5]
IPR2014-00272	§ 103	Tuckey and Coleman[6]

II. ANALYSIS

A. Claim Construction

In an *inter partes* review, the Board interprets claim terms in an unexpired patent according to the broadest reasonable construction in light of the specification of the patent in which they appear. *See In re Cuozzo Speed Techs., LLC*, 778 F.3d 1271, 1279–81 (Fed. Cir. 2015); 37 C.F.R. § 42.100(b). Under that standard, and absent any special definitions, we give claim terms their ordinary and customary meaning, as would be understood by one of ordinary skill in the art at the time of the invention. *See In re Translogic Tech., Inc.*, 504 F.3d 1249, 1257 (Fed. Cir. 2007). Any special definitions for claim terms must be set forth with reasonable clarity, deliberateness, and precision. *See In re Paulsen*, 30 F.3d 1475, 1480 (Fed. Cir. 1994).

1. Prior Constructions

In its two separate Petitions in IPR2014-00272 and IPR2014-00273, Petitioner argued alternative claim constructions for various terms under both the broadest reasonable interpretation and *Philips* standards (as asserted by Patent Owner in the copending district court litigation), respectively. *See*

[3] Tuckey et al., US 5,579,739, issued Dec. 3, 1996 (Ex. 1005).
[4] Ford et al., US 5,692,479, issued Dec. 2, 1997 (Ex. 1106).
[5] Chih et al., US 5,341,842, issued Aug. 30, 1994 (Ex. 1006).
[6] Coleman et al., US 5,765,537, issued June 16, 1998 (Ex. 1004).

272 Pet. 5; 273 Pet. 17. In our Decisions to Institute, we determined that all terms of the involved claims should be accorded a uniform claim construction (273 Dec. Inst. 9–10) and then consolidated the proceedings (272 Paper 12).

We gave certain terms the following preliminary claim constructions in the Decision on Institution:

Claim Term or Phrase	Claim Construction
"A fuel injection system . . . which uses a fuel recirculation loop to minimize or eliminate the need of a hot fuel return line and a low pressure regulator"	Even according the claim terms their ordinary meaning, the preamble recites an intended use. 272 Dec. Inst. 13.
"a fuel pump . . . driven at a substantially constant speed"	"*a fuel pump that is controlled to operate at a substantially fixed speed*" *Id.* at 16–17.
"fuel return path with flow constraint"	"*a path which presents resistance that restricts the flow of fuel in the return path*" *Id.* at 18.
"allowing fuel recirculation to . . . creat[e] stable fuel pressure"	"*adapted to allow fuel recirculation to stabilize pump operation and to create stable fuel pressure*" *Id.* at 19.

Neither party challenges our prior constructions expressly.

Patent Owner, however, requests further construction of two terms included within two previously construed phrases: (1) "flow constraint" and (2) "fuel recirculation." PO Resp. 23–30. As noted above, claims 38 and 40 both recite a fuel recirculation loop, related to and including, a fuel return path with flow constraint.

We address the construction of each limitation in the following sections. The patentability of claims 38 and 40 turns, in particular, on the construction of "fuel return path with flow constraint."

2. "fuel return path with flow constraint"

In the Decision on Institution, we construed a "fuel return path with flow constraint" to mean "a path which presents resistance that restricts the flow of fuel in the return path." 272 Dec. Inst. 18. In so doing, we rejected Petitioner's argument that the claims were limited to a valve, noting that the Specification taught the use of a "needle valve" as a means of constraining flow. *Id.* at 17–18 (citing Ex. 1001, 6:32–54). Accordingly, we stated that "our construction is not limited to a valve, nor does our construction exclude a valve." *Id.* at 28.

In its Response, Patent Owner argues that the term "flow constraint" should be further limited to a "fixed flow resistance." PO Resp. 23–24. Patent Owner relies, *inter alia*, on the prosecution history and the Specification. *Id.* Petitioner disputes Patent Owner's limiting construction in its Reply, relying on the example of a "needle valve" in the Specification as a means to constrain flow. Pet. Reply 4. Alternatively, Petitioner persists in arguing that variable resistance regulator valves are excluded from the scope of the claims. *See, e.g.*, Tr. 59:15–60:10, 16:5–21, 66:18–20, 13:22–14:19 (arguing in the alternative whether pressure regulators are part of the claimed system); *see also* 272 Pet. 11–18 (relying on prosecution history to exclude regulators). After considering the parties' arguments and evidence, we revisit our prior construction for this term.

a. The '414 Patent Specification

We begin our analysis with the '414 patent Specification, including the language of the claims. Both claim 38 and claim 40 recite "a fuel return path with flow constraint." Although claim 40 further recites that the flow constraint is "provided by an orifice of predetermined diameter," this additional limitation does not change the meaning of the claim term that appears in both claims.[7] *See In re Rambus Inc.*, 694 F.3d 42, 48 (Fed. Cir. 2012) ("[U]nless otherwise compelled . . . the same claim term in the same patent . . . carries the same construed meaning.") (citing *Omega Eng'g Inc. v. Raytek Corp.*, 334 F.3d 1314, 1334 (Fed. Cir. 2003)). In other words, we determine the meaning of "a fuel return path with flow constraint" to be the same in claim 38 and claim 40.

The phrase "flow constraint" appears only in the claims. As we noted in the Decision to Institute, however, the Specification describes "proper restrictions on the bypass fuel flow." 272 Dec. Inst. 17. (citing Ex. 1001, 6:42–43). In particular, the Specification states as an example that "one may choose the size of the fuel by-pass lines 35, 37, 38 so that they provide proper flow resistance or introduce a restriction by other means." Ex. 1001, 6:43–45. The Specification then explains that those means "include, but are not limited to, using a needle valve or a diaphragm-like plate with a hole that has a proper diameter for fuel restriction." *Id.* at 6:45–48.

With respect to fuel-return line 31, the Specification states: "Using the same principle as described in the previous section, we can further improve the fuel injection fluid system by adding an extra fuel-return as

[7] Indeed, as seen in the prosecution history, the Applicant and Examiner did not treat claim 40 differently than claim 38 for purposes of the disclaimer discussed below. *See* Ex. 1008, 334.

shown in FIG. 2." S*ee id.* at 8:38–40. Thus, the fuel-return line operates according to the same principle as the fuel-bypass line, except the fuel-bypass line is normally closed and the fuel-return line is normally open. *See id.* at Fig. 2.

Given the Specification's example of a needle valve as a type of flow constraint, we are not persuaded that "flow constraint" should be construed to mean "fixed flow resistance," as proposed by Patent Owner. Although a needle valve may not be adjusted while in use, Patent Owner's declarant admits that a needle valve is adjustable. *See* Ex. 2001 ¶ 49. Accordingly, because a "needle valve" is adjustable under certain circumstances (e.g., when designing a system, *see id.* ¶¶ 49–50), we do not construe "flow constraint" to be a "fixed flow resistance," as asserted by Patent Owner.

Our analysis, however, does not stop there. Upon reconsidering the arguments and evidence, we amend our construction of "a fuel return path with flow constraint" to exclude the use of a pressure regulator or incremental resistance valve, because, as explained in further detail below, both were disclaimed during prosecution.

b. Prosecution history

Issued claim 38 was not part of the application as originally filed.[8] Rather, issued claim 38 was submitted as claim 42 of the application through an amendment process:

> 42. (New) A fuel injection system for delivering fuel from a fuel supply to fuel injectors of an engine comprising:
> a fuel supply,
> at least one fuel injector,

[8] Application No. 10/143,657, which became the '414 patent, was originally filed on May 10, 2002.

> a fuel pump having an outlet and an inlet connected to the fuel supply and driven at a substantially constant speed,
>
> a main fuel supply line from the outlet of the fuel pump in fluid communication with at the least one fuel injector,
>
> a fuel by-pass line with flow constraint connected from some location in the main fuel supply line, including the outlet of the fuel pump to some location in the fuel supply,
>
> including the inlet of the fuel pump, allowing fuel recirculation to stabilize the pump operation, and creating stable fuel pressure.

Ex. 1008, 147–48 (Amendment, filed August 11, 2004).

Claim 42 was subsequently amended multiple times in an attempt to overcome a series of prior art rejections.

For example, in a Final Office Action (mailed Feb. 1, 2006), the Examiner rejected claim 42, *inter alia*, because the prior art had flow constraints that used a valve. *Id.* at 246 (finding "**valve 1** [of the prior art] constrains flow, as does **any** valve"). In fact, the Examiner noted that the claims were "very broad and read on the prior art" with various pressure control structures:

> Applicant's claims are very broad and read on the prior art and they include many various embodiments which make the application quite confusing. The subject area is very crowded with various fuel pressure control structures and methods-most commonly valves are used to spill fuel back to the tank to lower the pressure during certain operating conditions. These valves are usually closed at times of high fuel pressure demand.

Id. at 242. However, the Examiner also stated that the claims might be allowable if they were limited to an orifice plate:

> Examiner felt that much of the claimed invention was shown and taught in the prior art, perhaps except for multiple return lines having a normally open valve therein and another having a normally closed valve therein, upstream of the fuel rail.

> Previously such claims containing these elements were indicated allowable on the record and during interviews. Claims which recite **only** an orifice plate may not be anticipated or obvious–but there are no such claims–the orifice plate is recited in a list of alternative other devices which are shown in the art.

Id. at 242–43 (emphasis in original).

In response to the final rejection, claim 42 was amended to read:

> 42. (Currently amended): A fuel injection system for delivering pressurized fuel from a fuel supply to fuel injectors of an engine which uses a fuel recirculation loop to minimize or eliminate the need of a hot fuel return line and a low pressure regulator comprising:
>
> a fuel supply,
>
> a fuel rail in fluid communication with at least one fuel injector,
>
> a fuel pump having an outlet and an inlet, the inlet being connected to the fuel supply and driven at a substantially constant speed,
>
> a main fuel supply line connected from the outlet of the fuel pump to the fuel rail in fluid communication with the at least one fuel injector,
>
> a fuel return path ~~line~~ with flow constraint, connected from some location in the main fuel supply line, including the outlet of the fuel pump, avoiding fuel rail to some location in the fuel supply[[,]] including the inlet of the fuel pump, allowing fuel recirculation to stabilize the pump operation, and creating stable fuel pressure.

Id. at 273.[9] In accompanying Remarks, the Applicant stated that its system "*eliminates* most of the expensive, elaborate, and often slow acting and non-

[9] Application claim 49 (which later became issued claim 40) was also added at this time:

> 49. (New): A fuel injection system for delivering fuel from a fuel supply to fuel injectors of an engine which uses a fuel recirculation loop to minimize the need of a hot fuel return line and a low pressure regulator, comprising:

linear pressure control elements and their related elaborate systems shown in the references cited, and relied upon [by] the Examiner." *Id.* at 279 (emphasis added). The Applicant further explained that by eliminating a pressure regulator, its system was simpler and less expensive:

> ***Eliminating a relatively expensive regulator and use of simpler less expensive system of binary controllers (on/off valves)*** can save automobile manufacturers huge sums of money. ***It is essential to the concept to create a stable multi-pressure system where the pressure can be instantaneously changed between pressure levels*** which can be reliably and repeatedly varied so that within those pressure levels much higher and much lower fluid pressures than that of the single pressure system can be used directly at injector nozzles.

Id. (emphasis added).

To distinguish its system from the prior art, Applicant then argued that the use of a pressure regulator or a pressure relief valve was disadvantageous

---

> a fuel supply,
>
> a fuel rail in fluid communication with at least one fuel injector,
>
> a fuel pump having an outlet and an inlet, the inlet being connected to the fuel supply and driven at a substantially constant speed,
>
> a main fuel supply line connected from the outlet of the fuel pump to the fuel rail in fluid communication with at least one fuel injector,
>
> a fuel return path with flow constraint, provided by an orifice of predetermined diameter in the return path connected from some location in the main fuel supply line, including the outlet of the fuel pump avoiding fuel rail, to some location in the fuel supply indicating the inlet of the fuel pump, allowing fuel recirculation to stabilize the pump operation creating stable fuel pressure.

Ex. 1008 at 273.

because "[t]he response time of a regulator in the regulating region is delayed, because time is needed to physically move the pressure-regulating element." *Id.* at 287. As such, Applicant stated that its use of a "binary electromagnetic valve and flow restraint (a linear element) has a quick response time to pressure changes." *Id.* Applicant then stated definitively: "The Application *does not use* pressure regulator or pressure relief valve." *Id.* (emphasis added).

Applicant repeatedly argued that its system differed from the prior art because it does not use pressure regulators or pressure relief valves. For example, the Examiner rejected claim 42 as anticipated by U.S. Patent No. 5,425,342 ("Ariga," Ex. 1010), identifying Ariga's valve 24 as the flow constraint. Ex. 1008, 252–54. Figure 1 of Ariga is reproduced below:

FIG.1

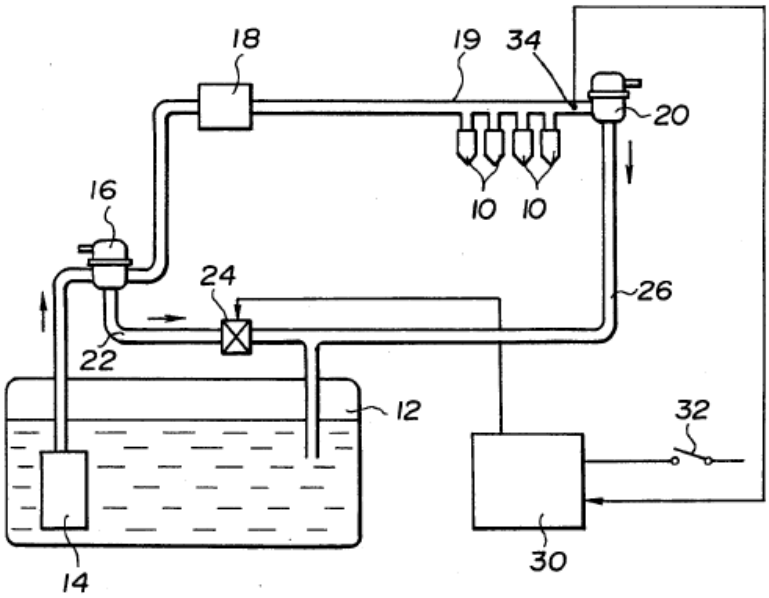

Figure 1 of Ariga depicts a fuel supply system that includes fuel tank 12, fuel pump 14, and pressure regulator 16 that returns fuel to fuel tank 12

through return passage 22, which includes flow control valve 24. Ex. 1010, 2:65–3:23.

According to Applicant, the Ariga system "is well accepted in the industry that uses pressure regulators." Ex. 1008, 290. Applicant explains that as pressure builds up in the Ariga system, fuel is fed through low-pressure regulator 16 to fuel injectors at a pressure pre-set by regulator 16. *Id.* Applicant then explains that no excess fuel will flow through return passage 22 until the pump has built up pressure exceeded by the low pressure set by regulator 16. *Id.* But Applicant states that accurately presetting a pressure value for the pressure relief valve or pressure regulator "may be time consuming and expensive." *Id.* Accordingly, Applicant states definitively, again, that its "Application *does not use* pressure regulators." *Id.* (emphasis added).

The latter Amendment did not result in allowance, and Applicant appealed to the Board, repeating many of its prior arguments that its system does not use pressure regulators or pressure release valves. In its Appeal Brief, Applicant argued:

> The present invention modifies the standard system by ***eliminating pressure regulators and incremental regulation means of any type from the system***, as well as valves of any type in the main fuel line from fuel pump to fuel rail.

Id. at 451 (emphasis added).

With respect to claim 42 in particular (which Applicant refers to as "Configuration 1"), the Appeal Brief explains that, rather than use unpredictable pressure regulators, Configuration 1 relies on keeping a predetermined constant speed and a recirculation flow to provide reliable pressure:

> Every configuration of the invention includes this recirculation like configuration 1 through a fuel return path or its equivalent structure which is necessary to achieve the constant flow needed to stabilize pump output ***so that it is predictable, unlike fluid pressure by prior art regulators and varying fuel pump speed, that are always sending pressure and making adjustments.*** Instead, this invention in all configurations except Configuration 2 provides a pump running at a predetermined constant speed and a recirculation flow to provide reliable pressure. No such stabilized constant speed fuel pump system has been known in the prior art of fuel delivery systems for fuel injection in automobiles and other uses. ***This normally open "fuel return line" for dominating the fuel pump flow and keeping the pump at constant speed for a steady constant pressure is present in all configurations of the invention. It is, in fact, the very basis for permitting the invention's far simpler pressure modification system than has been available in the prior art.***

Id. at 455 (emphasis added).

Finally, regarding the rejection over Ariga, Applicant again, distinguished Ariga, stating that "no matter what the similar superficial appearances may be in a drawing, it still remains true that output of Ariga's pump 14 passes through a pressure regulator . . . . No fuel flow exists if pressure is less than the pressure set by the pressure regulator." *Id.* at 495. Applicant than reemphasizes that its "system *does not use* pressure regulator[s], but depends on the recirculation loop and flow constraint element to obtain pressure at the pre-set level." *Id.* (emphasis added).

Claim 42 was allowed on April 5, 2007. *Id.* at 555 (Notice of Allowance).

c. Analysis of Prosecution History Disclaimer

"Absent claim language carrying a narrow meaning, the PTO should only limit the claim based on the specification or prosecution history when

those sources expressly disclaim the broader definition." *In re Bigio*, 381 F.3d 1320, 1325 (Fed. Cir. 2004). Thus, for purposes of the broadest reasonable construction, claim terms are interpreted according to their ordinary meaning in light of, and to be consistent with, the intrinsic evidence, which consists of the language of the claims as a whole, the Specification, and the prosecution history. *See Tempo Lighting, Inc. v. Tivoli, LLC*, 742 F.3d 973, 977 (Fed. Cir. 2014) ("In claim construction, this court gives primacy to the language of the claims, followed by the specification. Additionally, the prosecution history, while not literally within the patent document, serves as intrinsic evidence for purposes of claim construction. This remains true in construing patent claims before the PTO.") (citing *In re Morris*, 127 F.3d 1048, 1056 (Fed. Cir. 1997)). *See also Microsoft Corporation v. Proxyconn, Inc.,* No. 2014-1542, -43 (Fed. Cir. June 16, 2015) ("The PTO should also consult the patent's prosecution history in proceedings in which the patent has been brought back to the agency for a second review."). In light of Applicant's unequivocal statements during prosecution, we determine that there is an express disclaimer of pressure regulators and other forms of incremental regulation as a flow constraint for issued claims 38 and 40.

The disclaimer of pressure regulators in the introduction section of the Appeal Brief is particularly express, *i.e.*, "eliminating pressure regulators and incremental regulation means of any type from the system," and is applied in the Brief to Configuration 1 (application claim 42). It is clear from the above prosecution history that the stabilization of pressure (e.g., at a high pressure) is based on fuel recirculation through the flow constraint of an open fuel-return line (or fuel by-pass). This fuel-return line may use a

binary valve to open and close the fuel-return line and to instantaneously switch between high and low pressure states. However, pressure regulators and incremental regulation devices are incompatible with the invention because they do not allow for instantaneous pressure stabilization in the same manner as binary valves.

Further, the amendments and disclaimers made throughout prosecution were clear and essential to allowance. For example, Applicant repeatedly distinguished its invention over prior art like Ariga by stating that its system "*does not use* pressure regulator[s]." Ex. 1008, 290, 495 (emphasis added).

Moreover, the Specification is consistent with limiting the construction of "fuel return path with flow constraint" to exclude pressure regulators or incremental valves. The Specification criticizes the prior art's use of regulators and spring-loaded ball valves as interfering with pressure stabilization and instantaneous changes in the pressure (which allows for finely-controlled fuel injection). For example, the Specification states that the use of pressure regulators and pressure release valves "have had mixed results at best." Ex. 1001, 3:45–60. The Specification further states that its system "reduces the critical dependence to a fuel regulator, which contains numerous high-precision mechanical parts." *Id.* at 8:55–67. Similarly, the Specification discourages the use of variable valves like spring-loaded ball valves because they can cause "erratic engine performance":

> In the mean time, ***just "opening" and "closing" a spring-loaded ball valve physically takes more than one millisecond.*** This sets the minimum pulse width for fuel injection during idling to no less than 2 milliseconds. The fuel injection pulse width is thus limited by the time needed for operating a spring loaded ball valve ***and, as a result, may have***

> ***an unpredictable amount of fuel injection and cause erratic engine performance.***

Id. at 2:66–3:7 (emphasis added).

Of note, our construction is not inconsistent with the Specification's example of a needle valve as a flow constraint. The Applicant disclaimed incremental regulation valves (like spring-ball pressure relief valves) during prosecution. Although needle valves are able to be finely adjusted when not in use, they are not used to open and close the fuel return line, as the binary valves described in the Specification are. *See* Ex. 1001, 6:32–54.

Thus, the "needle valve" example is not functioning as an incremental regulation valve during operation of the invention. Rather, the "needle valve" operates like the Specification's other example of a flow constraint, a diaphragm plate with a hole in it. Ex. 1001, 6:32–54. Indeed, during prosecution, the Applicant explained that the needle valve and diaphragm plate with an orifice were interchangeable. Ex. 1008, 287–88 ("To choose a proper orifice diameter, one may first install a needle valve in the path of fuel by-pass, adjust the setting of restraint to determine fuel flow . . . . [t]hen replace the needle valve by an orifice that lets the same amount of fuel flow for the said model of fuel system."). The Applicant explained that a needle valve could be used during the design of the system to determine the proper orifice size, and then, once the orifice size has been determined, the needle valve could be replaced with the diaphragm plate. *Id.*

The Federal Circuit's decision in *Tempo Lighting* is instructive here. In *Tempo Lighting*, the Court affirmed the Board's application of prosecution history disclaimer. 742 F.3d at 978. The court stated that "the PTO is under no obligation to accept a claim construction proffered as a

prosecution history disclaimer…." *Id.* But the court stated that it was appropriate in that case because "in this instance, the PTO itself requested Tivoli rewrite the 'non-photoluminescent' limitation in positive terms. Tivoli complied, and then supplied clarification about the meaning of the "inert to light" limitation." *Id.*

Here, Applicant amended the claims and then supplied clarification about the meaning of "fuel return path with flow constraint" during prosecution. Thus, we determine that, even under the broadest reasonable interpretation standard that we apply to *inter partes* proceedings, prosecution history disclaimer applies to the term "fuel return path with flow constraint," in light of Applicant's clear statements disclaiming pressure regulators and incremental valves during prosecution.[10]

d. Conclusion

We conclude that the prosecution history states an express disclaimer of "pressure regulators and incremental regulation means of any type from the system, as well as valves of any type in the main fuel line from fuel pump to fuel rail." Ex. 1008, 338. This is the broadest reasonable construction that would be consistent with the intrinsic evidence read as a whole, i.e., the claim language, the Specification, and prosecution history. This disclaimer applies to the "fuel return path with flow constraint" of issued claim 38, and applies, *a fortiori*, to the "fuel return path with flow

[10] *See also In re Abbott Diabetes Care Inc.*, 696 F.3d 1142, 1149–50 (Fed. Cir. 2012) (where Specification criticizes prior art structures, none of the embodiments of the Specification contain those structures, and the claim language does not contain those structures, the Specification may be inconsistent with the prior art structures).

constraint" of issued claim 40, which has a flow constraint provided by "an orifice of predetermined diameter."

Thus, a "flow constraint" is a narrowing of the fuel-return line that restrains flow. In order not to read out preferred embodiments, we understand that binary valves may be used to open and close the fuel-return line. Nor do we read out the embodiment of a needle valve, with the understanding that such a valve does not change while in use. In this connection, we decline to adopt Patent Owner's proposed construction that the resistance is per se "fixed." However, we construe the "fuel return path with flow constraint" with the understanding that variable valves and incremental pressure regulation are disclaimed.

3. "fuel recirculation"

Patent Owner proposes that the term "fuel recirculation" should be construed as "continuous flow fuel return." PO Resp. 25. Patent Owner asserts that fuel is always circulating through the fuel return path, arguing that an objective of the invention is to maintain constant pressure, Ex. 1001, 5:16–19, and that the resistance of the flow constraint is fixed. PO Resp. 25–26 (citing Ex. 2001 (Muller Decl.) ¶ 50). Patent Owner further relies on statements in the prosecution history by the patentee that there is a "continuous fuel flow recirculation loop." PO Resp. 27–28 (citing Ex. 1008, 100, 105, 154, 206, 279, 283, 296, 450, 452, 464, 483, 512).

Petitioner does not believe that "fuel recirculation" requires a construction. Pet. Reply at 5. Petitioner argues that Patent Owner's proposed construction of "continuous" recirculation "would exclude the preferred embodiments in the '414 patent specification." *Id.* at 5–6 (citing *N. Am. Container v. Plastipak Pack*, 415 F.3d 1335, 1345 (Fed. Cir. 2005))

(holding that claim interpretations "that do not read on the preferred embodiments are rarely, if ever, correct"). Petitioner asserts that in every embodiment described in the '414 patent Specification, the fuel-return path includes a closeable control valve. Pet. Reply 5 (citing Ex. 1001, Figs. 1 and 2).

We find Petitioner's argument persuasive and decline to adopt Patent Owner's construction. While the prosecution history disclaimed the use of variable valves, the prosecution history and Specification are consistent with the notion that a binary valve may be used to close, instantaneously, the fuel-return line in order to give a brief power boost in one mode of operation. Ex. 1001, 4:11–16, 41–44, 9:7–14, Fig. 6. We do not consider such a mode of operation to be inconsistent with the recirculation of fuel set forth in the preamble, which is the "normal" mode of operation. *See* Fig. 2.

B. Principles of Law

To prevail in its challenges to the patentability of the claims, Petitioner must prove unpatentability by a preponderance of the evidence. 35 U.S.C. § 316(e); 37 C.F.R. § 42.1(d).

To establish anticipation, each limitation in a claim must be found in a single prior art reference, arranged as recited in the claim. *Net MoneyIN, Inc. v. VeriSign, Inc.*, 545 F.3d 1359, 1369 (Fed. Cir. 2008). While the limitations must be arranged or combined in the same way as in the claim, identity of terminology is not required. *In re Gleave*, 560 F.3d 1331, 1334 (Fed. Cir. 2009); *In re Bond*, 910 F.2d 831, 832 (Fed. Cir. 1990). Moreover, a reference anticipates a claim "if it discloses the claimed invention such that a skilled artisan could take its teachings in combination with his own knowledge of the particular art and be in possession of the invention." *In re*

Graves, 69 F.3d 1147, 1152 (Fed. Cir. 1995) (emphasis omitted). Thus, "it is proper to take into account not only specific teachings of the reference but also the inferences which one skilled in the art would reasonably be expected to draw therefrom." *In re Preda*, 401 F.2d 825, 826 (CCPA 1968).

A patent claim is unpatentable under 35 U.S.C. § 103(a) if the differences between the claimed subject matter and the prior art are such that the subject matter, as a whole, would have been obvious at the time the invention was made to a person having ordinary skill in the art to which said subject matter pertains. *KSR Int'l Co. v. Teleflex Inc.*, 550 U.S. 398, 406 (2007). The question of obviousness is resolved on the basis of underlying factual determinations, including: (1) the scope and content of the prior art; (2) any differences between the claimed subject matter and the prior art; (3) the level of skill in the art; and (4) objective evidence of nonobviousness. *Graham v. John Deere Co. of Kansas City*, 383 U.S. 1, 17–18 (1966).

In that regard, an obviousness analysis "need not seek out precise teachings directed to the specific subject matter of the challenged claim, for a court can take account of the inferences and creative steps that a person of ordinary skill in the art would employ." *KSR*, 550 U.S. at 418; *see also Translogic Tech., Inc.*, 504 F.3d 1249, 1259 (Fed. Cir. 2007). A prima facie case of obviousness is established when the prior art itself would appear to have suggested the claimed subject matter to a person of ordinary skill in the art. *In re Rinehart*, 531 F.2d 1048, 1051 (CCPA 1976). The level of ordinary skill in the art may be reflected by the prior art of record. *See Okajima v. Bourdeau*, 261 F.3d 1350, 1355 (Fed. Cir. 2001); *In re GPAC Inc.*, 57 F.3d 1573, 1579 (Fed. Cir. 1995); *In re Oelrich*, 579 F.2d 86, 91 (CCPA 1978).

We analyze the instituted grounds of unpatentability in accordance with the above-stated principles.

C. Anticipation of Claims 38 and 40 over Tuckey

Petitioner contends that Tuckey anticipates claims 38 and 40. 273 Pet. 26–30. We have reviewed Petitioner's detailed explanation identifying where each limitation allegedly appears in Tuckey, along with the testimony of Petitioner's declarant, Dr. Gregory W. Davis. *Id.*; 273 Ex. 1112 ¶¶ 23–40. We have also reviewed Patent Owner's assertions and evidence as to why Petitioner's explanations and evidence are deficient. PO Resp. 32–37; Ex. 2001 ¶¶ 20–61.

1. Tuckey (Ex. 1005)

Tuckey relates to a fuel system with a pressure demand regulator for an internal combustion engine with fuel injectors, and, in particular, discloses a "returnless" system. Ex. 1005, Title; 2:2–10. The "returnless" or "no return" system means that there is no hot return of fuel from the engine back to the fuel tank. *See id.*

Figure 9 of Tuckey is reproduced below:

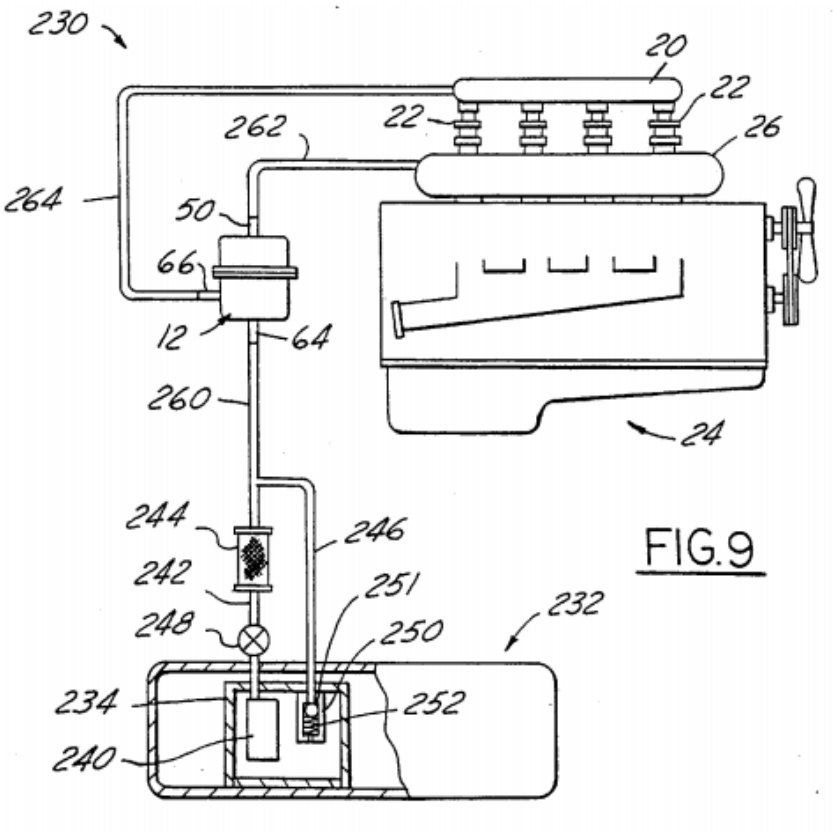

Figure 9 depicts fuel supply line from a fuel tank, with fuel pump 240, continuing through demand regulator 12 to fuel rail 20, which has parallel fuel injectors 22. Ex. 1005, 7:67; Ex. 1007 ¶ 42. In connection with the Figure 9 embodiment, Tuckey states that the fuel pump is "preferably driven at a substantially constant speed to deliver fuel . . . [to] demand regulator 12." Ex. 1005, 8:4–7; Ex. 1007 ¶ 50.

According to Tuckey, "[t]o deliver the fuel at a substantially constant pressure, . . . a portion of [the] fuel supplied by the pump is by-passed through line 246 and the pressure control relief valve 250 into the reservoir 234 or the [fuel] tank 232" Ex. 1005, 8:7–11. Pressure control relief valve 250 makes use of "a ball valve element 251 urged towards its closed position by a backing spring 252." *Id.* at 7:61–62. Tuckey explains that "[t]he force produced by the spring 252 is set so that the valve opens at a pressure (such

as 55 psig) which is higher . . . than the pressure (such as 50 psig) at which the demand regulator 12 supplies fuel through line 264 to the rail 20 and fuel injectors 22 of the engine 24." *Id.* at 7:62–67.

2. Analysis

In the Petition, Petitioner alleges how each limitation of claims 38 and 40 would be understood to be disclosed by Tuckey. 273 Pet. 26–29. For example, Petitioner argues that fuel return path 246 with pressure control relief valve 250 meets "a fuel return path with flow constraint, connected from some location in the main fuel supply line, including the outlet of the fuel pump, avoiding fuel rail to some location in the fuel supply including the inlet of the fuel pump, allowing fuel recirculation to stabilize the pump operation, and creating stable fuel pressure." 273 Pet. 28–29. As to claim 40, Petitioner states that pressure control relief valve 250 is a spring biased ball valve, and asserts that the seat in which the ball element sits is an "orifice of [a] predetermined diameter." *Id.* at 29–30 (citing 273 Ex. 1112 ¶¶ 36–40).

Patent Owner also argues that Tuckey does not disclose "a fuel return path with flow constraint, … allowing fuel recirculation to stabilize the pump operation, and creating stable fuel pressure" because pressure relief valve 250 does not create the type of flow and pressure conditions required by Patent Owner's asserted claim constructions of "flow constraint" and "fuel recirculation." PO Resp. 33–37. Petitioner argues that Tuckey discloses fuel recirculation, which, according to the '414 Specification, is all that is required to stabilize fuel pump and pressure. Pet. Reply 7–8.

In light of our revised construction of "a fuel return path with flow constraint," we agree with Patent Owner that Tuckey does not anticipate

claims 38 and 40. Applicant expressly disclaimed pressure regulators and incremental regulation "of any type from the system." Ex. 1008, 451. Thus, because Tuckey's system includes demand regulator 12 and pressure relief valve 250 (a ball-spring valve), Tuckey does not meet the limitation "a fuel return path with flow constraint . . . allowing fuel recirculation to stabilize the pump operation, and creating stable fuel pressure," as recited by claims 38 and 40.

We, therefore, conclude that Petitioner has not shown by a preponderance of the evidence that Tuckey anticipates claims 38 and 40.

D. Obviousness of Claims 38 and 40 over Tuckey and Ford '479

1. Ford '479 (Ex. 1106)[11]

Ford '479 relates to a returnless fuel delivery system for an internal combustion engine, with a jet pump that supplies the fuel pump. Ex. 1106, Title, 1:4–6. Upon demand from the engine, fuel pump 24 pumps fuel from fuel tank 20 through fuel line 16, and into high pressure fuel rail 12 for distribution to the fuel injectors (not shown). *Id.* at 3:16–27. As a returnless system, there is no hot fuel return. Figure 1 of Ford '479 is reproduced below.

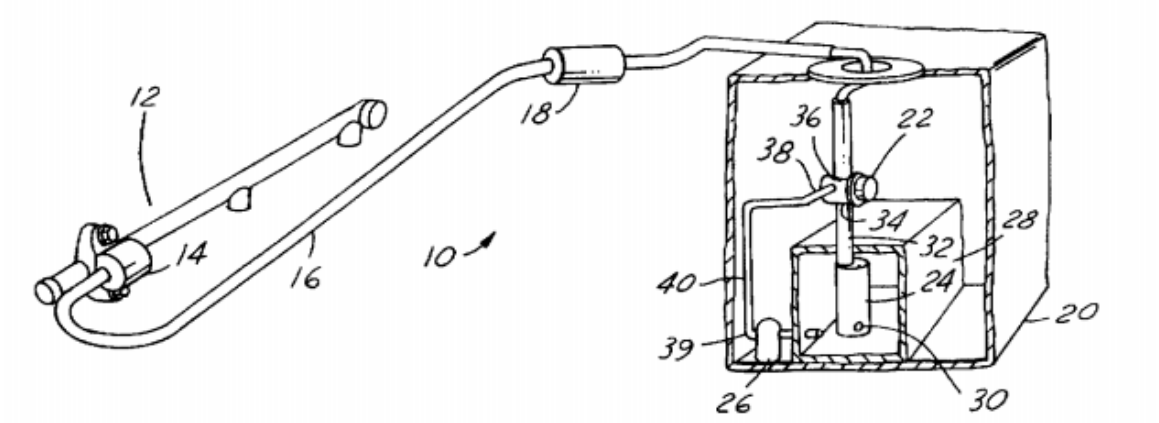

[11] Ex. 1106 is docketed under IPR2014-00273.

Figure 1 of Ford ’479 depicts a collateral fuel line that returns fuel from the main fuel line to the fuel reservoir through a jet pump. The collateral fuel line branches off of a pressure regulator on the main fuel line. Specifically, “[p]ressure regulator 22 has a second outlet port 38 such that excess fuel not required by fuel rail 12 is routed to jet pump 26 at low pressure via fuel line 40.” *Id.* at 3:45–47, Fig. 2. Jet pump 26 returns fuel to the fuel reservoir and fuel pump 24 to promote the availability of fuel supply for the fuel pump. *Id.* at 3:50–65. Figure 4 of Ford ’479 is also reproduced below:

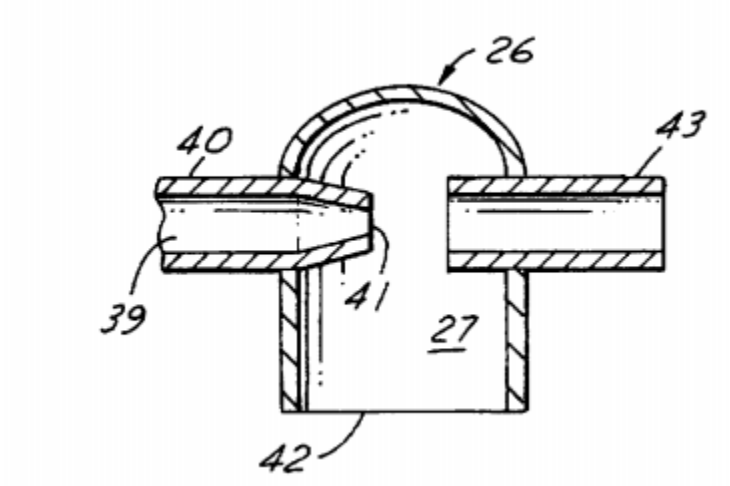

Figure 4 illustrates how fuel in a collateral fuel line flows through orifice 41 into jet pump 26.

2 Analysis

In the Petition, Petitioner alleges how each limitation of claims 38 and 40 would be understood to be disclosed by the combination of Ford and Tuckey, and why such a combination would have been obvious. 273 Pet. 31–37. For example, Petitioner asserts that Ford discloses fuel return path 40 with jet pump 26 and its opening 42 meet “a fuel return path with flow constraint, connected from some location in the main fuel supply line,

including the outlet of the fuel pump, avoiding fuel rail to some location in the fuel supply including the inlet of the fuel pump, allowing fuel recirculation to stabilize the pump operation, and creating stable fuel pressure." *Id.* at 35–36.

Patent Owner argues that Ford '479 does not disclose

> a fuel return path with flow constraint, connected from some location in the main fuel supply line, including the outlet of the fuel pump, avoiding fuel rail to some location in the fuel supply including the inlet of the fuel pump, allowing fuel recirculation to stabilize the pump operation, and creating stable fuel pressure.

PO Resp. at 38–40. Specifically, Patent Owner states that Dr. Davis admits that the portion of the jet pump orifice he identified as the "orifice" in the fuel return path does not create stable fuel pressure, and that, in any event, the presence of the pressure regulator between the fuel return path and the fuel rail prevents the functionality required of the claimed structures. *Id.* Petitioner argues that Ford '479 discloses continuous fuel recirculation and stable fuel pressure. Pet. Reply 11–12.

We agree with Patent Owner that Ford '479 does not teach a "fuel return path with flow constraint" in light of the express disclaimer of pressure regulators and incremental regulation "of any type from the system." Ex. 1008, 451. Ford '479's pressure regulator 22 is therefore inconsistent with this disclaimer. On cross-examination, Petitioner's declarant, Dr. Davis, affirmed Ford '479's need for a pressure regulator, explaining that the orifice does not stabilize the pressure without the assistance of the pressure regulator: "In this system, again, because it's a real system applied to a vehicle where the demands are changing all the time, fuel flow demands, you need the pressure regulator in order to provide

a stable fuel pressure to the system." Ex. 2002, 283:18–25. Moreover, as we found above, Tuckey's use of demand regulator 12 and pressure relief valve 250 do not constitute "flow constraints" within the proper construction of the term, either. We, therefore, find that Petitioner has not shown by a preponderance of the evidence that Ford '479 and Tuckey render obvious claims 38 and 40.

E. Obviousness of Claims 38 and 40 over Tuckey and Chih

1. Chih (Ex. 1006)

Chih discloses a bottom mount fuel tank module for an automobile with a jet pump for maintaining a minimum level of fuel in a fuel reservoir for maintaining a minimum level of fuel in the reservoir, e.g., when the fuel tank is low or when conditions such as cornering or slope parking cause the fuel level in the tank to fall below the fuel pump inlet. Ex. 1006, Title and Abstract. Figure 1 of Chih is depicted below:

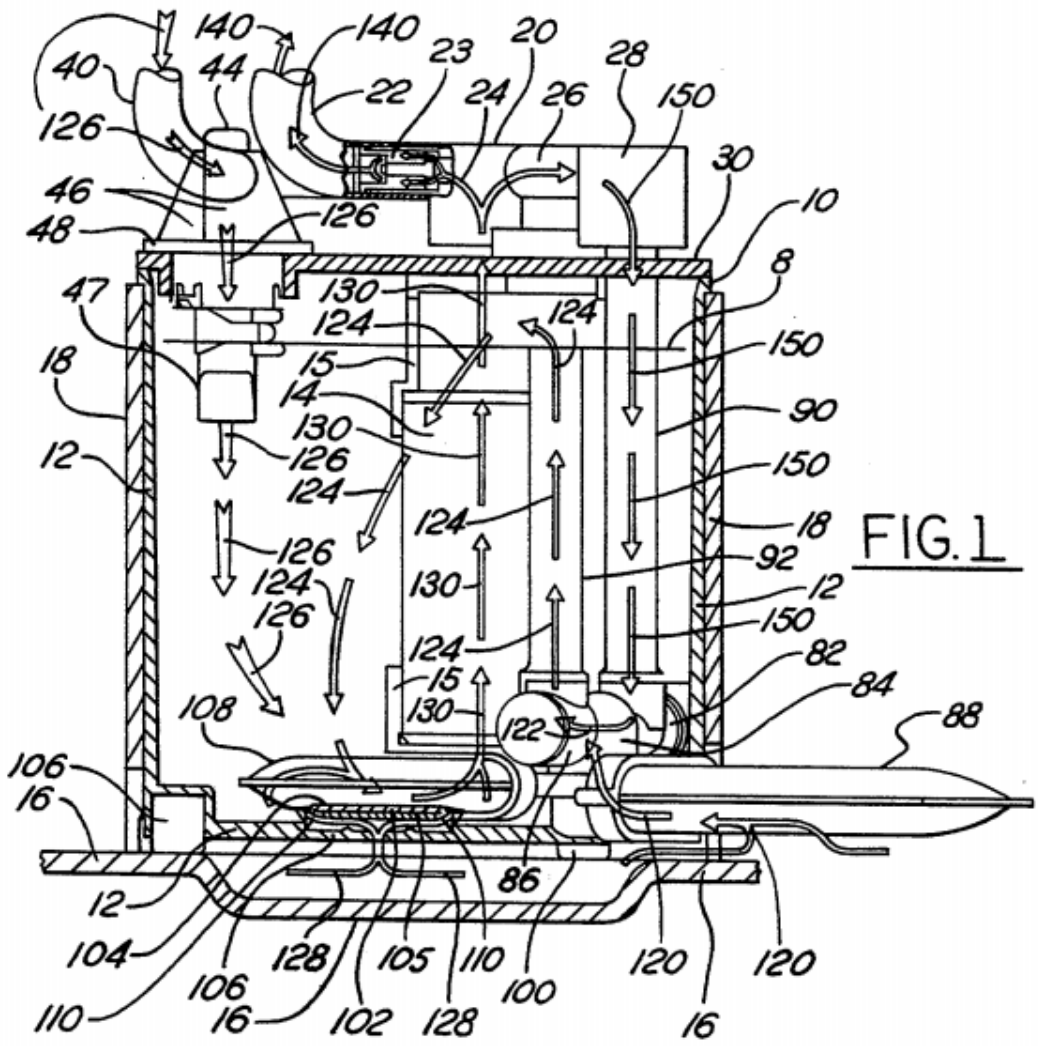

FIG. 1

Figure 1 of Chih depicts fuel pump 14 and fuel line 130, which branches into (1) first stream 140, which travels towards the engine, and (2) second stream 150, which flows back through venturi opening 84, with the assistance of a jet pump, to fuel reservoir 12. *Id.* at 4:17–45. Notably, Chih's system also contains a hot return from the engine that flows through item 40 back to the reservoir. *Id.* at 4:49–51.

2. Analysis

In the Petition, Petitioner alleges how each limitation of claims 38 and 40 would be understood to be disclosed by the combination of Chih and

Tuckey, and why such a combination would have been obvious. Pet. 55–60. For example, Petitioner asserts that Chih discloses reservoir 12, which meets "a fuel supply"; engine fuel delivery conduit 22, which meets "a main fuel supply line connected from the outlet of the fuel pump to the fuel rail in fluid communication with the at least one fuel injector"; second stream 150 through a jet pump with narrowed portion 82a meets "a fuel return path with flow constraint, connected from some location in the main fuel supply line, including the outlet of the fuel pump, avoiding fuel rail to some location in the fuel supply including the inlet of the fuel pump, allowing fuel recirculation to stabilize the pump operation, and creating stable fuel pressure." *Id.* Petitioner notes that Chih does not disclose a pressure regulator. *Id.* at 56.

With respect to "a fuel pump having an outlet and an inlet, the inlet being connected to the fuel supply and driven at a substantially constant speed," Petitioner relies on fuel pump 14 of Chih, as modified in view of Tuckey. *Id.* at 57–58. Petitioner contends that it would have been obvious to "combine a constant speed pump of Tuckey with the disclosure of Chih" based on a "design need," as one of a "finite number of identified, predictable solutions," and because Tuckey teaches that it is preferable to use a constant speed pump. *Id.* at 58 (citing Ex. 1007 (Davis Decl.) ¶¶ 62–67)). Petitioner contends that, to the extent that Chih does not disclose the details of the engine in satisfaction of "a fuel rail in fluid communication with at least one fuel injector," it would have been obvious to combine the system of Chih with Tuckey's fuel rail 20 in communication with fuel injectors 22. *Id.* at 57. Petitioner argues that such a combination would have been obvious as the application of a known technique to a known

device to yield predictable results, and as the predictable use of prior art elements according to known functions. *Id.* (citing *KSR*, 550 U.S. at 417; Ex. 1007 (Davis Decl.) ¶ 61).

As to claim 40, Petitioner "relies on its presentation with respect to claim 38 to satisfy all of the limitations of claim 40 as construed in this Petition." *Id.* at 60.

Patent Owner argues it would not have been obvious to a person of ordinary skill in the art to combine the teachings of Tuckey with Chih, i.e., to combine the structures and to drive the pump at a constant speed. PO Resp. 44–46. Specifically, Patent Owner asserts that the fuel rail disclosed in Tuckey physically could not be combined with the pump module disclosed in Chih because the fuel rail of Tuckey does not accommodate the fuel return system of Chih. *See id.* Patent Owner also asserts that there are different approaches to pressure control used in a "return" system as opposed to a "returnless" system. *Id.* Relatedly, Patent Owner argues that Chih does not disclose "a fuel return path with a flow constraint . . . allowing fuel recirculation to stabilize the pump operation [and] creating stable fuel pressure," as recited by claims 38 and 40, because Dr. Davis admitted that such a jet pump configuration alone does not create stable pressure, and he does not know whether it dampens pressure pulsations. *Id.* at 46–49 (citing Ex. 2002, 283:18–284:18). Patent Owner suggests that hot return lines are further inconsistent with the preamble of claims 38 and 40. *See* PO Resp. 44 (citing Ex. 2001 (Muller Decl.) ¶ 74).

In response, Petitioner argues that Patent Owner's complaint is irrelevant because Tuckey was combined for the details regarding the injectors and the driving speed of the pump. Pet. Reply 13. Petitioner also

argues that both systems use a pressure regulator, and therefore do not have "different approaches to pressure control," as Patent Owner asserts. *Id.* Petitioner further argues that Patent Owner's declarant admitted that "going from a Return to Returnless System is a simple relocation of the pressure regulator that was common and well-known prior to the '414 patent." *Id.* at 13–14. And finally, Petitioner argues that the preamble is not limiting, thereby making any distinction between return and returnless systems meaningless. *Id.*

We agree with Patent Owner that Petitioner has provided insufficient reasoning as to why it would have been obvious to a person of ordinary skill in the art to modify the system of Chih to drive the pump at a constant speed. Petitioner has not identified the design need to modify Chih in this manner, other than by reference to the Specification of the '414 patent.

Further, even if Petitioner may characterize the options of variable speed and constant speed as a "finite number of options," Petitioner does not address whether the result would be predictable upon substitution. Tuckey describes in context a "no-return fuel system 230 embodying this invention with a demand fuel regulator 12 to which fuel is supplied at a substantially constant pressure by an electric fuel pump 240 with a by-pass pressure relief valve 250." Ex. 1005, 7:45–49; *see also id.* at 7:49–67 (with further detail). Tuckey is thus a "returnless" system, whereas Chih has a return from the engine and uses a different approach to controlling pressure for the fuel supplied to the fuel injectors. *See* Ex. 2001 (Muller Decl.) ¶ 74. Petitioner has not explained why it would have been obvious to make the speed of Chih's pump constant without the accompanying features of Tuckey, which, according to Tuckey, are also used "[t]o control the pressure of fuel," *inter*

alia, in view of changing engine fuel demand. *Id.* at 1:21–28; 7:56. Further, Petitioner has not explained how eliminating the hot return from the engine of Chih would not affect pressure control.

We conclude that Petitioner has provided an insufficient basis for the conclusion that it would have been obvious to combine the teaching of Chih and Tuckey as asserted. Therefore, on this record, we conclude that Petitioner has not shown by a preponderance of the evidence that claims 38 and 40 have been obvious over Chih and Tuckey.

F. Obviousness of Claims 38 and 40 over Tuckey and Coleman

1. Coleman (Ex. 1004)

Coleman discloses a fuel recirculation system for an internal combustion engine with a fuel pump that is adapted to prevent separation of an aqueous fuel emulsion. Ex. 1004, Title; 1:1–5.

Figure 1 of Coleman is reproduced below:

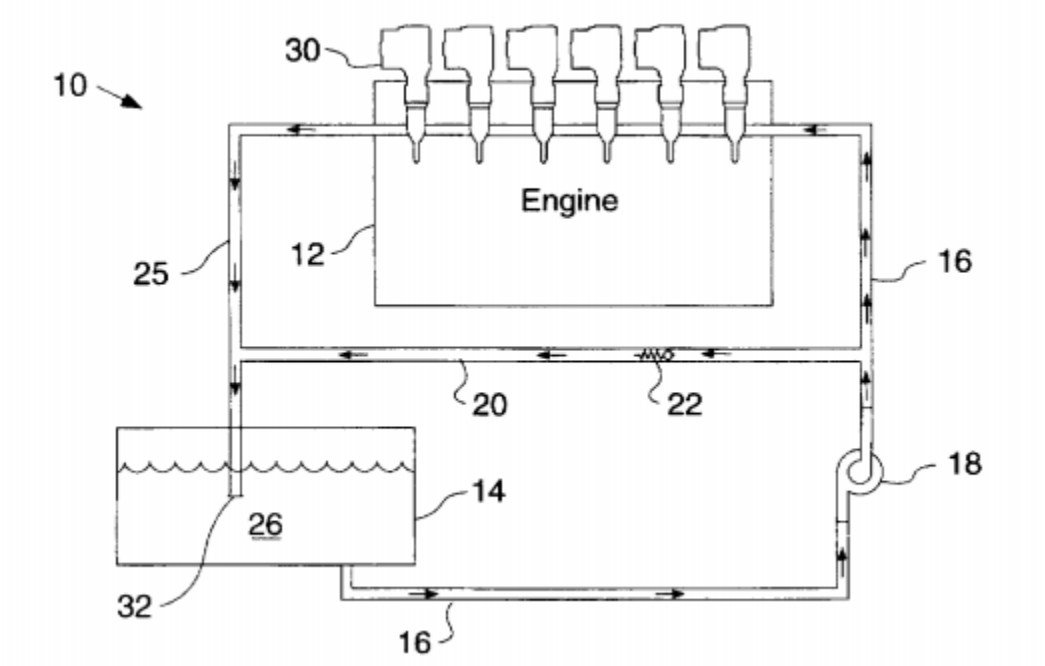

Figure 1 of Coleman depicts main fuel line 16 and fuel return path 20 that branches off of the main fuel line back to the fuel tank. *Id.* at 2:53–56. Fuel return path 20 contains check valve 22. Coleman's system also includes fuel line 25 (a hot return) from the engine to the fuel tank. *Id.* at 2:67–3:1. Coleman discloses check valve 22 in fuel return path 20. *Id.*at 3:1–7, Fig. 1.

2. Analysis

In the Petition, Petitioner alleges how each limitation of claims 38 and 40 would be understood to be disclosed by the combination of Coleman and Tuckey, and why such a combination would have been obvious. 272 Pet. 48–55. For example, Petitioner asserts that Coleman discloses fuel supply 26 in fuel tank 14, which meets "a fuel supply." *Id.* at 50

With respect to "a fuel return path with flow constraint, connected from some location in the main fuel supply line, including the outlet of the fuel pump, avoiding fuel rail to some location in the fuel supply including the inlet of the fuel pump, allowing fuel recirculation to stabilize the pump operation, and creating stable fuel pressure," Petitioner relies on both fuel recirculation bypass conduit 20 with fuel recirculation check valve 22 of Coleman and on pressure control relief valve 250 of Tuckey. *Id.* at 53–54. In this connection, Petitioner cites Tuckey's disclosure that a portion of the fuel flows through the fuel return path to "deliver the fuel at a substantially constant pressure." *Id.* (citing Ex. 1005, 8:4–11; Ex. 1007 (Davis Decl.) ¶ 54).

Petitioner notes that Coleman does not disclose a pressure regulator (as consistent with the preamble). *Id.* at 50.

With respect to "a fuel pump having an outlet and an inlet, the inlet being connected to the fuel supply and driven at a substantially constant speed," Petitioner contends that it would have been obvious to combine a constant speed pump of Tuckey with the disclosure of Coleman based on a "design need," as one of a "finite number of identified, predictable solutions," and because Tuckey teaches that it is preferable to use a constant speed pump. *Id.* at 51–52 (citing Ex. 1007 (Davis Decl.) ¶¶ 44–52).

Petitioner relies on main fuel supply line 16 of Coleman, from the outlet of the fuel pump 18 to the fuel rail which is in fluid communication with fuel injectors 30 to meet "main fuel supply line 16 from the outlet of the fuel pump 18 to the fuel rail, which is in fluid communication with the fuel injectors 30." *Id.* at 53. Petitioner contends that, to the extent that Coleman does not disclose "a fuel rail" in satisfaction of "a fuel rail in fluid communication with at least one fuel injector," it would have been obvious to combine the system of Coleman with the fuel rail of Tuckey's fuel rail as the predictable use of the prior art according to its established function. *Id.* at 50 (citing *KSR Int'l*, 550 U.S. at 417).

As to claim 40, Petitioner relies on the spring biased ball valve 250 of Tuckey as disclosing a flow constraint "provided by an orifice of predetermined diameter." *Id.* at 55.

Petitioner further contends that it would have been obvious to combine the fuel system of Coleman with the constant speed pump of Tuckey. *Id.* at 51–55. Petitioner asserts that the combination would have been obvious because of a design need, because there are a finite number of identified, predictable solutions, and because Tuckey teaches that, it is preferable to use a constant speed pump. *Id.* at 51–52.

Patent Owner argues that Coleman's fuel rail is not a "fuel rail," as recited by claims 38 and 40, because Coleman's fuel injectors are arrayed in series instead of in parallel. PO Resp. 41–42. However, read in context, claims 38 and 40 require "at least one fuel injector," at which point the distinction between fuel injectors in series and parallel collapses. Therefore, we find that Coleman's fuel rail is within the broadest reasonable interpretation of "fuel rail," as recited by claims 38 and 40.

Patent Owner also argues Coleman's check valve 22, which is a ball pressed against a valve by a spring, is not a "flow constraint" and does not allow "fuel recirculation" under the constructions proposed by Patent Owner. PO Resp. 40–43. Specifically, Patent Owner argues that the check valve varies the flow resistance and does not allow continuous flow. PO Resp. 43 (citing Ex. 2001 (Muller Decl.) ¶¶ 72–73; Ex. 2002 (Davis Tr.), 305:10–17). Relatedly, Patent Owner argues that it would not have been obvious to combine Coleman with Tuckey because the inclusion of a return line in Tuckey would substantially alter the design of the fuel system.

We agree with Patent Owner that check valve 22 of Coleman, and pressure relief valve 250 of Tuckey are both spring-ball valves, Ex. 2001 ¶¶ 56, 72, which is inconsistent with the express disclaimer of pressure regulators and incremental regulation "of any type from the system." Ex. 1008, 451. Thus, these structures do not meet a "fuel return path with flow constraint," as recited by claims 38 and 40. Further, for similar reasons as above with respect to the combination of Chih and Tuckey, Petitioner has not provided sufficient reasoning as to why it would have been obvious to a person of ordinary skill in the art to combine return and returnless systems in the asserted manner. We, therefore, find that, on this record, Petitioner has

not shown by a preponderance of the evidence that Coleman and Tuckey render obvious claims 38 and 40.

III. PATENT OWNER'S CONTINGENT MOTION TO AMEND

Because we do not find that Petitioner has met its burden of proving claims 38 and 40 unpatentable, we do not reach Petitioner's contingent motion to amend. *See* Mot. Amend at 1 (Patent Owner moves to replace claims 38 and 40 only if claims 38 and 40 are found to be unpatentable).

IV. PATENT OWNER'S MOTION TO EXCLUDE

Patent Owner moves to exclude Exhibit Nos. 1024, 1026, 1027, 1030, 1032, and 1033 filed by Petitioner. Mot. Exclude 1. Specifically, Patent Owner argues that Exhibit No. 1024 is untimely and substantively inadmissible as containing requests for admission; Exhibit No. 1027 violates the pages limits and the rule against incorporation by reference; and Petitioner's Opposition to Patent Owner's Motion to Amend circumvented allotted page limits by reference to claim charts in Exhibits 1026, 1030, 1032, and 1033. *Id.* at 2–6; Paper 32, 3 (citing Fed. R. Civ. P. 36).

Petitioner responds that Patent Owner failed to timely object to the evidence offered by Petitioner as required by 37 C.F.R. § 42.64(b). Paper 29, 2. Petitioner also argues that Exhibits 1024 and 1027 are admissible for certain limited purposes. *Id.* at 3–8.

We agree with Petitioner that Patent Owner failed to timely object within five business days to the proffer of evidence, as required by 37 C.F.R. § 42.64(b) ("Once a trial has been instituted, any objection must be served within five business days of service of evidence to which the objection is directed."). Patent Owner does not disagree with Petitioner's representation

that no objection was served, nor does Patent Owner make any contrary representation. We, therefore, deny the motion to exclude for lack of timely service of a predicate objection. In any event, this opinion does not rely on any of the exhibits that were the subject of the motion. Accordingly, Patent Owner's Motion to Exclude is *denied*.

V. CONCLUSION

We conclude that Petitioner has not shown by a preponderance of the evidence that claims 38 and 40 are unpatentable as anticipated by Tuckey, or as obvious over any of the combinations of Tuckey and Ford '479, Tuckey and Chih, or Tuckey and Coleman.

VI. ORDER

In consideration of the foregoing, it is hereby:

ORDERED that Petitioner has not shown by a preponderance of the evidence that claims 38 and 40 are unpatentable;

FURTHER ORDERED that Patent Owner's Contingent Motion to Amend (Paper 21) is *dismissed*;

FURTHER ORDERED that Patent Owner's Motion to Exclude (Paper 27) is *denied*; and

FURTHER ORDERED that, because this is a Final Written Decision, parties to the proceeding seeking judicial review of the decision must comply with the notice and service requirements of 37 C.F.R. § 90.2.

UNITED STATES PATENT AND TRADEMARK OFFICE

BEFORE THE PATENT TRIAL AND APPEAL BOARD

FORD MOTOR COMPANY
Petitioner

v.

TMC FUEL INJECTION SYSTEM, LLC
Patent Owner

Case IPR2014-00272
Case IPR2014-00273
Patent 7,318,414 B2

Before BRIAN J. McNAMARA, TINA E. HULSE, and
JAMES A. WORTH, *Administrative Patent Judges*.

McNAMARA, *Administrative Patent Judge*, *concurring.*

I concur with my fellow judges on this case, but write separately to address issues raised during the oral hearing.

The Petition noted that "the preambles of the IPR claims confirm the claims cover only ***fuel systems that do not use a pressure regulator."*** Pet. 20 (emphasis in original). The Petition also identified many of the same statements in the prosecution history noted in the panel's decision. Pet. 19–26. Our Decision to Institute focused on the language of the claims in

reciting a goal (to minimize the need for a hot fuel return line and a low pressure regulator), as opposed to the claimed structure. Dec. to Inst. 11. We also noted that the specification of the '414 Patent stated that the structure "*eliminates the need to return the unused excess fuel from fuel rail* ***17*** *(hot fuel) to fuel tank* ***10*** to avoid pressure built-up. The structure also *reduces* the critical dependence . . . [on] *a fuel regulator*, which contains numerous high-precision mechanical parts." *Id.* at 12 (quoting Ex. 1001, col. 8, ll. 55–67). During the hearing, in response to a question about the construction of minimizing or eliminating the need for a pressure regulator in the preamble of claims 38 and 40, Petitioner's counsel argued:

> If you look through the prosecution history, there's only one answer and that's it has to be eliminated. It has to be gone. That's the only way to construe the phrase . . . . I think you'll be hard pressed in finding any true definition for that phrase other that what was in the prosecution history, and that was elimination of it completely.
>
> Tr. 16:10–21.

Patent Owner's counsel argued that

> There is no bypass control required in claims 38 and 40. And it does require a constant speed pump, Your Honor, and that affects the pressure in the system. The claims 38 and 40 do not, as petitioner's counsel argued, exclude a pressure regulator. It excludes a low pressure regulator at the end of the rail like we talked about in the preamble. It doesn't exclude using a pressure regulator in addition to stabilize the pressure. It just can't be here like in the Ford and Tuckey patent, it can't be between the pump and the rail interrupting the stabilization of the pressure at the rail.
>
> Tr. 33:12–20.

Patent Owner has not identified any limitation on the statements in the prosecution history that would confine the disclaimer to precluding the use

of pressure regulators just "between the pump and the rail" as Patent Owner argued during the hearing. The prosecution history indicates just the opposite. As the panel decision indicates, in response to a final rejection, Patent Owner submitted an Appendix[12] written by the inventor that specifically states, "The Application *does not use* pressure regulator or pressure relief valve." Ex. 1008, 287 (emphasis added).

As the panel decision points out, in an Appeal Brief that resulted in the Examiner withdrawing the rejections, *Id.* at 558–559, Patent Owner argued:

> The present invention modifies the standard system by ***eliminating pressure regulators and incremental regulation means of any type from the system***, as well as valves of any type in the main fuel line from the fuel pump to the fuel rail.
>
> *Id.* at 451.

Thus, Patent Owner obtained allowance by arguing that the claims preclude valves of any type between the fuel pump and the fuel rail, and pressure regulators and incremental regulation means of any type <u>from the system</u>.

Arguments during the hearing notwithstanding, Patent Owner cannot now retreat from the explicit disclaimer made in the prosecution that led to allowance of the claims.

---

[12] Appendix 1 was prepared by the inventor, Dr. Hou, provided to the Examiner informally during an interview, and submitted formally as an Appendix to the response to the final rejection filed by counsel. Ex. 1008, 276. Appendix 1 includes remarks by Dr. Hou distinguishing the invention and discussing advantages and broad differences from the prior art. *Id.*

PETITIONER:

Marc Lorelli
Frank Angileri
BROOKS KUSHMAN P.C.
mlorelli@brookskushman.com
fangileri@brookskushman.com

PATENT OWNER:

John F. Ward
David G. Lindenbaum
Francis Morris
WARD & ZINNA, LLC
jward@wardzinna.com
dlindenbaum@wardzinna.com
fmorris@wardzinna.com