Trials@uspto.gov
571-272-7822

Paper 13
Entered: May 28, 2015

UNITED STATES PATENT AND TRADEMARK OFFICE

BEFORE THE PATENT TRIAL AND APPEAL BOARD

MICROBOARDS TECHNOLOGY, LLC d/b/a AFINIA,
Petitioner,

v.

STRATASYS INC.,
Patent Owner.

Case IPR2015-00287
Patent 6,004,124

Before DONNA M. PRAISS, KRISTINA M. KALAN, and JON B. TORNQUIST, *Administrative Patent Judges.*

KALAN, *Administrative Patent Judge.*

DECISION
Denying Institution of *Inter Partes* Review
37 C.F.R. § 42.108

I. INTRODUCTION

Petitioner, Microboards Technology, LLC d/b/a Afinia, filed a Petition (Paper 1, "Pet.") to institute an *inter partes* review of claims 1, 2, 4, 6, 17, 18, 20, and 22 of U.S. Patent No. 6,004,124 (Ex. 1001, "the '124 patent"). Patent Owner, Stratasys Inc., filed a Preliminary Response (Paper 8, "Prelim. Resp."). We have jurisdiction under 35 U.S.C. § 314, which provides that *inter partes* review may not be instituted unless the information presented in the petition and any preliminary response shows that there is a reasonable likelihood that the petitioner would prevail with respect to at least one of the claims challenged in the petition. 35 U.S.C. § 314(a). We decline to institute an *inter partes* review as discussed below.

II. BACKGROUND

A. Related Matters

The parties indicate that the '124 patent is the subject of the following district court proceeding: *Stratasys Inc. v. Microboards Tech., LLC d/b/a Afinia*, Civil Action No. 13-cv-03228-DFW-TNL (D. Minn.). Pet. 1; Paper 6, 1.

B. The '124 Patent (Ex. 1001)

The '124 patent, titled "Thin-Wall Tube Liquifier," issued on December 21, 1999. The '124 patent describes a rapid prototyping system with a liquifier carried by an extrusion head. Ex. 1001, Abstract. The liquifier is formed of a thin-wall tube having an inlet end for receiving a filament of molding material and an outlet end for delivering the liquified material, which tube is encased in a heating block. *Id.* The tube has a first section adjacent the inlet end and exterior to the heating block, and a second

section which passes through the heating block. *Id.* An embodiment of the apparatus is depicted in Figure 9 as follows:

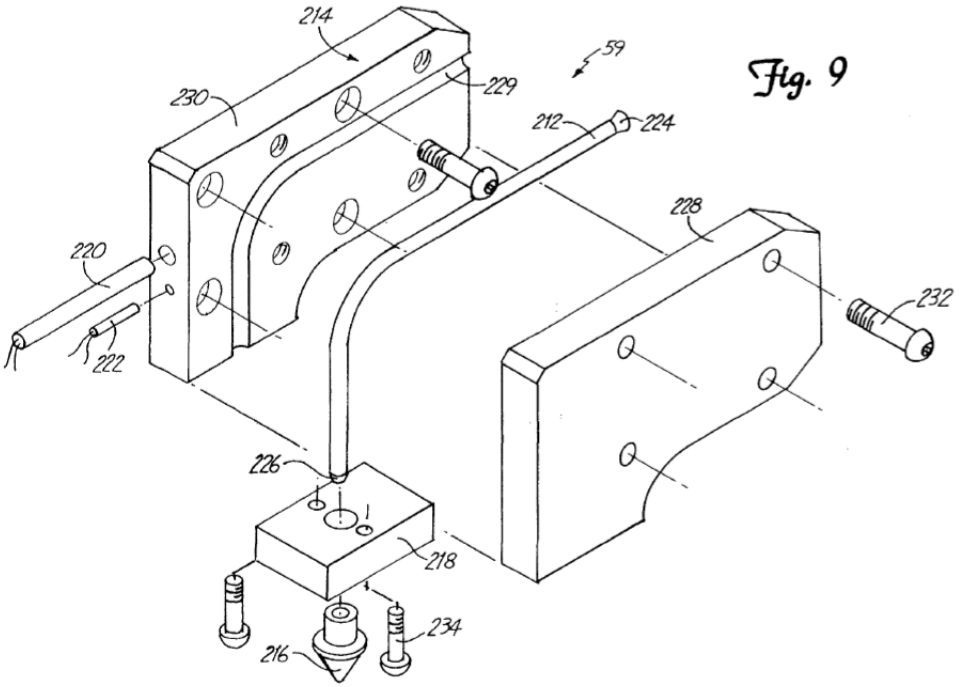

Figure 9 is an exploded view of the liquifier of the subject patent. *Id*. at 4:21.

Figure 9 depicts thin-wall tube 212 with inlet end 224, outlet end 226, and tip 216 at the outlet end of tube 212. *Id.* at 11:12–16. The wall thickness of tube 212 preferably is between 0.005–0.015 inches. *Id.* at 11:19–20. When using a 0.070 inch filament, tube 212 preferably has an inner diameter of about 0.074 inches. *Id.* at 11:17–19.

C. Illustrative Claims

Claims 1 and 17 of the ’124 patent are reproduced below:

1. An extrusion head for depositing layers of solidifying material in a desired pattern to form three-dimensional physical objects, the extrusion head comprising:
    a heating block made of heat conductive material;
    a heating element to heat the heating block;

> a first thin-wall tube having an inlet end for receiving a filament of a first material, an outlet end for delivering the first material in a molten state, and having a first section adjacent the inlet end and exterior to the heating block and a second section which passes through the heating block;
>
> a material advancee [sic] mechanism positioned to advance the filament of first material into the inlet end of the first thin-wall tube; and
>
> a nozzle at the outlet end of the first thin-wall tube for dispensing the first material in a molten state.

Ex. 1001, 13:2–18.

> 17. A liquifier for receiving a filament of material and liquefying the material for deposition in a molten state, comprising:
>
> a heating block made of heat conductive material;
>
> a first thin-wall tube having an inlet end for receiving a filament of a first material, an outlet end for delivering the first material in a molten state, and having a first section adjacent the inlet end and exterior to the heating block and a second section which passes through the heating block; and
>
> a nozzle at the outlet end of the first thin-wall tube for dispensing the first material in a molten state.

Id. at 14:24–36.

D. The Prior Art

Petitioner relies on the following prior art:

1. U.S. Patent No. 5,340,433, issued August 23, 1994 (“Crump”) (Ex. 1005);

2. UK Patent App. GB 2 156 440 A, published October 9, 1985 (“Evans”) (Ex. 1006);

3. U.S. Patent No. 5,042,228, issued August 27, 1991 (“Pearson”) (Ex. 1007);

4. U.S. Patent No. 4,352,007, issued September 28, 1982 (“Baker”) (Ex. 1008); and

5. PCT Patent Pub. WO 97/50278, published December 31, 1997 ("Floyd") (Ex. 1009).

E. The Asserted Grounds

Petitioner challenges claims 1, 2, 4, 6, 17, 18, 20, and 22 of the '124 patent as follows:

Reference(s)	**Basis**	**Claims Challenged**
Crump	§ 102	1, 2, 4, 6, 17, 18, 20, and 22
Crump and Evans	§ 103(a)	1, 2, 4, 6, 17, 18, 20, and 22
Crump and Pearson	§ 103(a)	1, 2, 4, 6, 17, 18, 20, and 22
Crump and Baker	§ 103(a)	1, 2, 4, 6, 17, 18, 20, and 22
Crump and Floyd	§ 103(a)	1, 2, 4, 6, 17, 18, 20, and 22

F. Claim Interpretation

The Board interprets claims in an unexpired patent using the broadest reasonable construction in light of the specification of the patent in which they appear. 37 C.F.R. § 42.100(b); *see also In re Cuozzo Speed Techs., LLC*, 778 F.3d 1271, 1281 (Fed. Cir. 2015) ("We conclude that Congress implicitly adopted the broadest reasonable interpretation standard in enacting the AIA."). Under the broadest reasonable interpretation standard, claim terms are given their ordinary and customary meaning in view of the specification, as would be understood by one of ordinary skill in the art at the time of the invention. *In re Translogic Tech., Inc.*, 504 F.3d 1249, 1257 (Fed. Cir. 2007).

Petitioner asks us to construe the claim term "thin-wall" as meaning "on the order of .005–0.015 inches." Pet. 13. Petitioner also asks us to construe the claim term "thin-wall tube" as "a single piece of tubing with an inlet end associated with a cap zone and an outlet end associated with a heating zone, the inlet end of the tube extending at least partially exterior to the heating block" and "further modified by the 'thin wall' aspect such that it complies with the dimensional range" proposed for that term. *Id.* at 13–14.

Patent Owner disagrees with Petitioner's proposed construction of "thin-wall." Prelim. Resp. 6, 11. Patent Owner does not propose alternative constructions for the terms "thin-wall" and "tube."

We do not adopt Petitioner's proposed construction of a particular range for the term "thin-wall" because it disregards the Specification's use of the prefatory term "preferably between 0.005–0.015 inches" (Ex. 1001, 11:20) in connection with one embodiment of the disclosure, and is inconsistent with principles of broadest reasonable interpretation. While the Specification may provide "a general guideline and examples sufficient to enable a person of ordinary skill in the art to determine" the scope of the claims, there is no requirement that our construction necessarily contain precise numerical measurements merely because they appear in the examples. *Enzo Biochem, Inc. v. Applera Corp.*, 599 F.3d 1325, 1335 (Fed. Cir. 2010).

We determine that no express claim construction is required for purposes of this decision.

III. ANALYSIS

We turn now to Petitioner's asserted grounds of unpatentability and Patent Owner's arguments in the Preliminary Response to determine whether Petitioner has met the threshold standard of 35 U.S.C. § 314(a).

A. Asserted Anticipation Ground Based on Crump

Petitioner challenges claims 1, 2, 4, 6, 17, 18, 20, and 22 as anticipated under 35 U.S.C. § 102 by Crump. To support these assertions, Petitioner relies on the Declaration of Thomas A. Campbell, Ph.D. (Ex. 1003, "Campbell Declaration").

Crump discloses an apparatus for modeling three-dimensional objects by building up material discharged from a dispensing head onto a base member at a controlled rate. Ex. 1005, Abstract. Figure 13 of Crump is reproduced below:

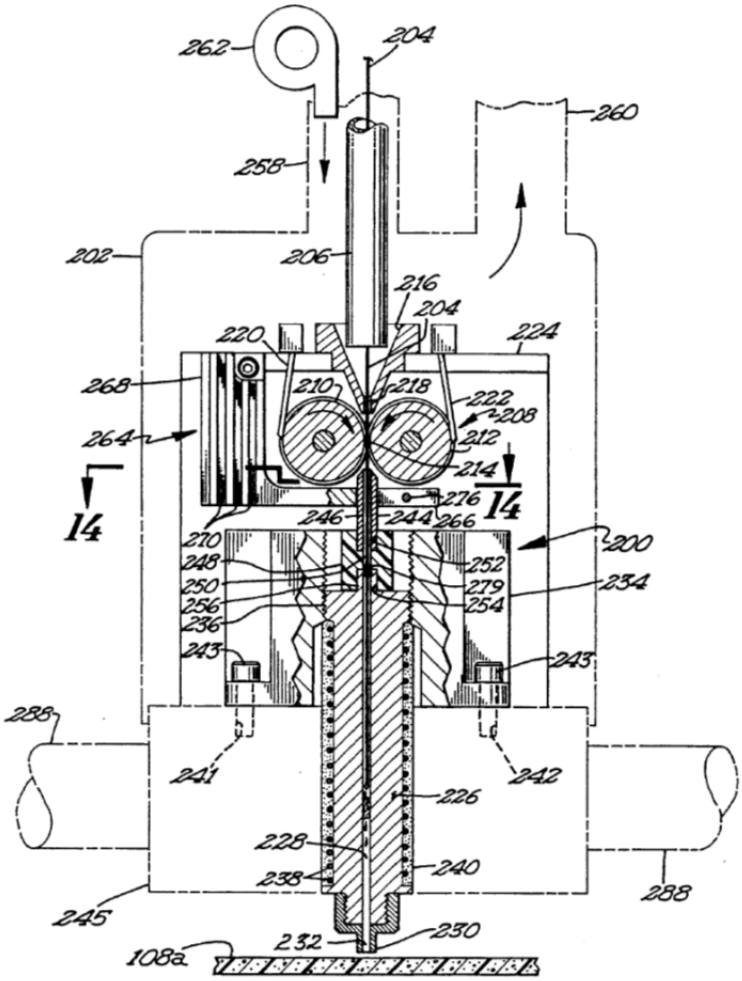

Fig 13

Figure 13 of Crump shows "still another embodiment of the material-applying apparatus utilizing a flexible strand as the supply material." *Id.* at 5:31–32. Petitioner also relies on Figures 3 and 5 of Crump, reproduced below with Petitioner's annotations:

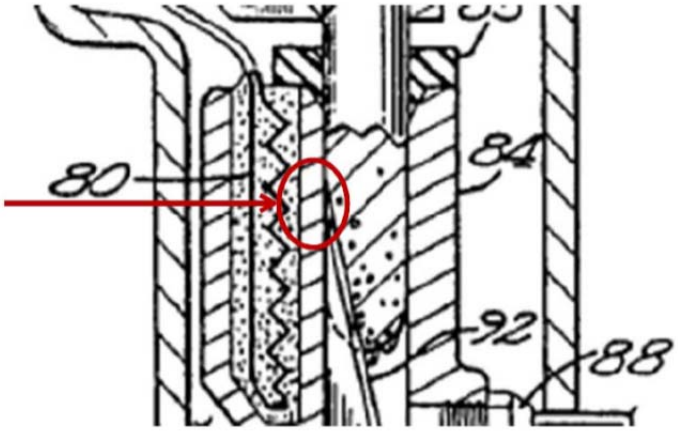

FIG. 3 (excerpt)

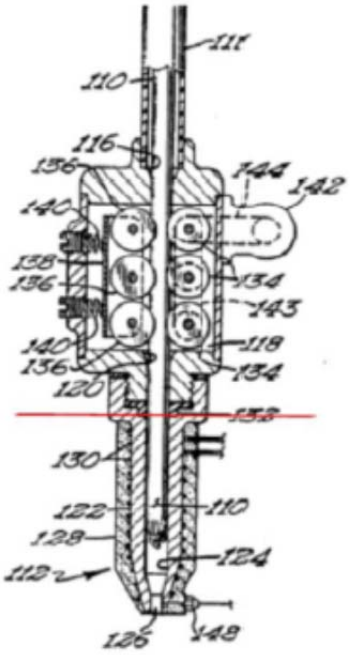

FIG. 5

Figure 3 (left) is a vertical section view of the dispensing head of Figure 1 of Crump. *Id.* at 5:4–5. Figure 5 is an elevation view of "a different embodiment of the material-applying apparatus utilizing a flexible strand as the supply material." *Id.* at 5:8–10.

There are several different embodiments of the Crump invention, according to the specification: "FIG. 1 illustrates one embodiment of the apparatus" (*id.* at 5:50–51) and "FIGS. 1 and 3 illustrate one embodiment in which the working material is supplied in the form of a solid rod 46" (*id.* at 6:61–63). Furthermore, "FIG. 5 illustrates another version of the apparatus for dispensing supply material" (*id.* at 10:19–20) and "Figures 13–15

illustrate still another embodiment of the apparatus for dispensing supply material" (*id.* at 11:44–47). The supply materials of Crump differ depending on the embodiment; they "could be flexible strands supplied from a reel in the manner described and shown with respect to FIG. 5, or they could be in the form of rods as illustrated at 46 with respect to FIG. 1." *Id.* at 19:58–62.

Petitioner argues that Crump teaches all of the elements of claim 1, rendering claim 1 anticipated. Pet. 20. Petitioner alleges that Figure 3 of Crump discloses an extrusion head for deposition layers of solidifying material in a desired pattern to form three-dimensional physical objects. Pet. 14–15 (citing Ex. 1005, 1:10–18, Fig. 3). Petitioner also argues that Figure 3 of Crump discloses a heating block made of heat conductive material (element 84), and a heating element to heat the heating block (element 80). *Id.* at 15. For disclosure of the thin-wall tube, Petitioner argues that, in the annotated version of Figure 3, reproduced *supra*, "the 'thin wall' tube has a wall thickness based on the dimensions provided for the filament that is 'on the order of .005–0.015 inches,' approximately 0.0125 inches." *Id.* at 17 (citing Ex. 1003 ¶ 37). In connection with Figure 13, Crump states: "With a strand 204 diameter of 0.050 inches, the internal diameter of strand passages . . . would be on the order of 0.0540 inches;" Petitioner bases its calculation of wall thickness on this disclosure. *Id.* at 16 (citing Ex. 1005, 13:26–32).

Patent Owner argues that Petitioner fails to articulate with particularity where each element of the claims is allegedly found in Crump. Prelim. Resp. 4. Specifically, Patent Owner alleges that Petitioner "relies upon no less than three separate and distinct embodiments of the invention shown in the Crump patent—the embodiments shown in Figures 3, 5, and 13—in its

attempt to demonstrate that the Crump patent discloses each of these elements." *Id.* at 5. Patent Owner argues that the Figure 3 embodiment has no "thin-wall tube," as it does not disclose the "tube" portion of the claimed thin-wall tube. *Id.* at 7–8. Patent Owner alleges that element 80, identified by Petitioner as the thin-wall tube in Figure 3, is not, in fact, a thin-wall tube, but part of the heating head 84. *Id.* at 9. Patent Owner further argues that Crump does not disclose a tube section having an inlet end exterior to the heating block, as Petitioner relies on nozzle 122 of Figure 5 to disclose this element without describing its relationship to heating head 84 in Figure 3. *Id.* at 15–18. Finally, Patent Owner argues that Petitioner does not explain how Crump discloses a nozzle at the outlet end of the thin-wall tube, as Petitioner relies on nozzle 226 of Figure 13 to disclose this element without relating it to the other elements of the challenged claims. Prelim. Resp. 18–20.

Based on this record, Petitioner's analysis is insufficient to establish a reasonable likelihood that it would prevail in showing at least one of the challenged claims is anticipated by Crump. To anticipate, the prior art reference must disclose all elements of the claim within the four corners of the reference, and must also disclose those elements arranged as in the claim. *Net MoneyIN, Inc. v. VeriSign, Inc.*, 545 F.3d 1359, 1369 (Fed. Cir. 2008); *In re Arkley*, 455 F.2d. 586, 587–88 (CCPA 1972) ("picking and choosing may be entirely proper in the making of a 103, obviousness rejection . . . but it has no place in the making of a 102, anticipation rejection."). Petitioner's picking and choosing of elements from different embodiments of Crump, without explanation of how these elements result in an arrangement of elements as in the claims, does not demonstrate persuasively that Crump discloses all of the elements of the disputed claims, arranged as in the claims.

Patent Owner also argues that Petitioner's calculations with respect to the "thin-wall tube" element are flawed. Prelim. Resp. 11–15. Petitioner bases its determination of wall thickness on the disclosure in Crump of "a strand 204 diameter of 0.050 inches." Pet. 16 (citing Ex. 1005, 13:26–32, Fig. 3). Strand 204, however, is designed to be used in the Figure 5 or Figure 13 embodiment. Ex. 1005, 11:64–66, 13:9–35. The Figure 3 embodiment is designed to accept supply rod 46. *Id*. at 7:19–21. Moreover, when the reference does not disclose that the drawings are to scale and is silent as to dimensions, arguments based on measurement of the drawing features are of little value. *Hockerson-Halberstadt, Inc. v. Avia Group Int'l*, 222 F.3d 951, 956 (Fed. Cir. 2000). Thus, Petitioner's arguments are not sufficient to show that the thin-wall tube required by claims 1 and 17 is disclosed by Crump.

We are unpersuaded that Petitioner has demonstrated a reasonable likelihood of prevailing on its assertion that independent claims 1 and 17, or their respective dependent claims, are anticipated under 35 U.S.C. § 102 by Crump, and decline to institute *inter partes* review on this ground.

Crump was before the Examiner during prosecution of the application leading to the issued patent. The Notice of Allowability stated that Crump did not disclose the amended claim limitations of the "thin-wall tube." Pet. 19 (citing Ex. 1002, Notice of Allowability 2, MB 119). Petitioner argues that the comments in the Notice of Allowability "were specifically directed to Figure 13 of Crump" and that there is no indication that "the Examiner had considered the unlabeled thin-wall tube shown in Figures 3 and 5 in reaching this conclusion." *Id.* Patent Owner argues that Petitioner's argument is misplaced, and urges the Board to reject this ground under 35

U.S.C. § 325(d) because the Patent Office already considered the Crump patent. Prelim. Resp. 20–21.

According to 35 U.S.C. § 325(d), "[i]n determining whether to institute or order a proceeding under this chapter, chapter 30, or chapter 31, the Director may take into account whether, and reject the petition or request because, the same or substantially the same prior art or arguments previously were presented to the Office." *See also Prism Pharma Co., Ltd. v. Choongwae Pharma Corp.*, Case IPR2014-00315, slip op. at 12–13 (PTAB Jul. 8, 2014) (Paper 14). Because Crump, and specifically the question of whether Crump discloses or suggests a thin-wall tube, was previously considered by the Patent Office, the Board exercises its discretion under 35 U.S.C. § 325(d) as an additional basis to decline to institute *inter partes* review on this ground.

B. Asserted Obviousness Grounds Based on Crump and Additional References

Petitioner challenges, under 35 U.S.C. § 103(a), claims 1, 2, 4, 6, 17, 18, 20, and 22 as unpatentable over (i) Crump and Evans; (ii) Crump and Pearson; (iii) Crump and Baker; and (iv) Crump and Floyd.

i. Crump and Evans

Evans is directed to a dispenser for meltable materials, an embodiment of which is shown in Petitioner's annotated Figure 1:

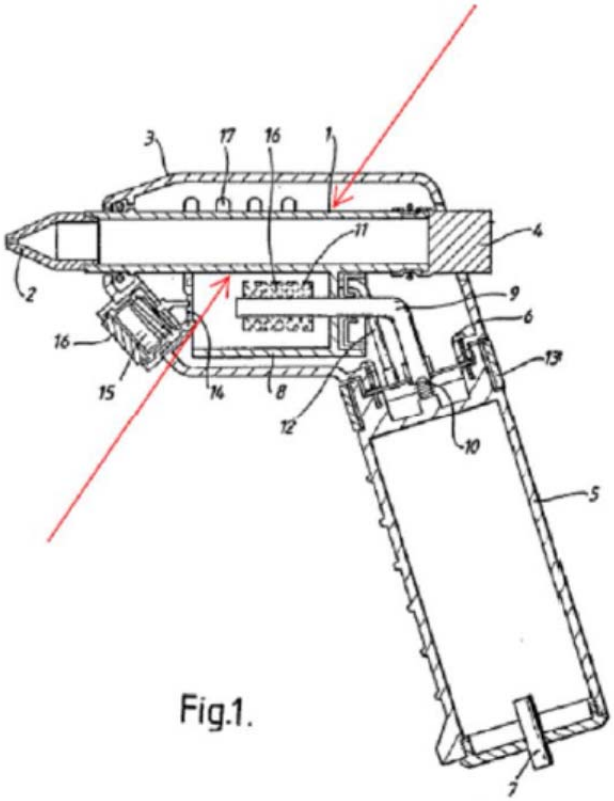

Fig.1.

Figure 1 is a cross-section of a dispenser according to Evans. Ex. 1006, 3:10–12; Pet. 30. Figure 1 depicts a dispenser with barrel 1 provided with nozzle 2 and end plug 4. Ex. 1006, 3:17–19. Evans's combustion chamber 8 is included in the body of the dispenser. *Id.* at 3:24–26. Petitioner asserts Evans discloses the thin-wall tube, arguing that Evans's "barrel is constructed as a thin-wall tube." Pet. 31. Petitioner further states that motivation to combine Evans and Crump may be found within Crump itself:

> Devices also exist for the manual making of models or sample articles, such as jewelry, from wax by the use of a wax dispensing gun from which the wax is dispensed in a heated, molten state … Also, glue guns … are available for heating and dispensing adhesives in a fluid, molten state for gluing articles together.

Id. (quoting Ex. 1005, 2:42–51).

Patent Owner argues that Evans fails to disclose a thin-wall tube or a heating block through which the thin-wall tube would pass. Prelim. Resp. 23–26. Patent Owner also argues that Petitioner fails to provide any articulated reasoning with a rational underpinning to combine Crump and Evans. *Id*. at 26–27.

We are not persuaded that Petitioner provides adequate explanation for how or why one of ordinary skill in the art would have combined Crump and Evans. It is not sufficient to demonstrate that each of the components in a challenged claim is known in the prior art. *See KSR Int'l Co. v. Teleflex Inc*., 550 U.S. 398, 418 (2007) ("a patent composed of several elements is not proved obvious merely by demonstrating that each of its elements was, independently, known in the prior art"). The Petitioner also must explain how a person of ordinary skill in the art would combine the elements disclosed in Crump and Evans. We are not persuaded that Petitioner has provided reasoning sufficient to justify a legal conclusion of obviousness. *See KSR*, 550 U.S. at 418 (citing *In re Kahn*, 441 F.3d 977, 988 (Fed. Cir. 2006)).

Petitioner's obviousness arguments are directed to "teaching a combination of a secondary reference, Evans *et al.* with Crump to supply the missing elements." Pet. 29. Petitioner's articulated reasoning for combining the references is that "[i]t would have been obvious to use a thin-wall tube for the extrusion of a plastic filament in the extrusion head of the '124 Patent." *Id.* Petitioner also asserts that a person of ordinary skill in the art would have combined Crump and Evans because Crump discloses glue guns for heating and dispensing adhesives. *Id.* at 31–32. Although Petitioner cites the Campbell Declaration (*id.*, citing Ex. 1003 ¶¶ 61–62) in further support of the

combination, Dr. Campbell fails to provide any additional explanation demonstrating it would have been obvious to combine the teachings of Crump and Evans.

Based on the record before us, Petitioner has not demonstrated a reasonable likelihood that it will prevail on its assertion that claims 1, 2, 4, 6, 17, 18, 20, and 22 would have been obvious under 35 U.S.C. § 103(a) over Crump and Evans.

ii. Crump and Pearson

Pearson is directed to a method for heating and dispensing hot melt materials, in which the hot melt material is contained "in a tube having a cylindrical outer surface portion over a majority of its length," and the hot melt material in the tube is heated "by a heater assembly through a heat transfer member having a cylindrical inner surface adapted to closely receive the cylindrical outer surface portion of the tube." Ex. 1007, Abstract.

Petitioner asserts Pearson discloses the thin-wall tube in a heat exchange relationship with a heating block, having an inlet portion that extends past the heat transfer member 22 and the associated heating element 38. Pet. 32–35. Petitioner further states that motivation to combine Pearson and Crump may be found within Crump "as discussed above." *Id.* at 35–36 (citing Ex. 1005, 2:42–51).

Patent Owner argues that Pearson fails to disclose a thin-wall tube or an inlet end for receiving a filament of first material. Prelim. Resp. 28–30. Patent Owner also argues that Petitioner fails to provide articulated reasoning with rational underpinning to combine Crump and Pearson. *Id*. at 31–32.

We are not persuaded that Petitioner's explanation of how or why one of ordinary skill in the art would have combined Crump and Pearson is

adequate. *See* Section III.B.i, *supra*. Petitioner's obviousness arguments are directed to Pearson supplying the "missing elements." Pet. 32. Petitioner identifies the claimed thin-wall tube as missing from Crump, but additionally relies on Pearson teaching "thin wall tubes that include an inlet that extends past the heat block/heat source in heat exchange relationship." *Id.* at 36. Petitioner's assertion that one of ordinary skill in the art would have combined the references because "[i]t would have been obvious to use a thin-wall tube for the extrusion of a plastic filament in the extrusion head of the '124 Patent" (*id.* at 33) is, however, conclusory and insufficient to show a reasonable likelihood of prevailing on the issue of obviousness over the combination of Crump and Pearson. *Id.* at 33. Although Petitioner further asserts that "the combination of Crump and Pearson is supported by a reasoned rationale for their combination" based on Crump and Pearson both disclosing hot melt adhesive devices, such as glue guns (*id.* at 35–36), the Petition lacks an articulated rationale for combining the selected teachings of Crump and Pearson. *Id.* at 36. Petitioner further cites the Campbell Declaration as support for the combination of Crump and Pearson. *Id.* at 35–36 (citing Ex. 1003 ¶¶ 61, 72–73). Dr. Campbell, however, fails to provide any additional explanation or evidence demonstrating it would have been obvious to combine the teachings of Crump and Pearson.

Based on the record before us, Petitioner has not demonstrated a reasonable likelihood that it will prevail on its assertion that claims 1, 2, 4, 6, 17, 18, 20, and 22 would have been obvious over Crump and Pearson.

iii. Crump and Baker

Baker is directed to a hot melt multi-section hose heating system. Ex. 1008, Abstract. Petitioner asserts Baker discloses the thin-wall tube and the

stainless steel claim limitations. Pet. 36–37. Petitioner further states that motivation to combine Baker and Crump may be found within Crump "as discussed above." *Id.* at 38 (citing Ex. 1005, 2:42–51).

Patent Owner argues that Baker fails to disclose a thin-wall tube. Prelim. Resp. 32–34. Patent Owner also argues that Petitioner fails to provide articulated reasoning with a rational underpinning to combine Crump and Baker. *Id*. at 34–35.

We are not persuaded that Petitioner provides adequate explanation for how or why one of ordinary skill in the art would have combined Crump and Baker. *See* Section III.B.i, *supra.* Petitioner's obviousness arguments are directed to Baker supplying the "missing elements," namely, the thin-wall tube and the stainless steel claim limitations that are not taught by Crump. Pet. 36–37. Petitioner's assertion that one of ordinary skill in the art would have combined the references because "[i]t would have been obvious to use a thin-wall tube for the extrusion of a plastic filament in the extrusion head of Crump" (*id*. at 37) is, however, conclusory and insufficient to show a reasonable likelihood of prevailing on the issue of obviousness over the combination of Crump and Baker. Nor are we persuaded that "the combination of Crump and Baker, *et al.* is appropriate" because Crump lists glue guns as a hot melt adhesive device. *Id.* at 38. Petitioner further cites the Campbell Declaration as support for the combination of Crump and Baker. *Id.* at 37–39 (citing Ex. 1003 ¶¶ 61, 79, 81). Dr. Campbell, however, fails to provide any additional explanation or evidence demonstrating it would have been obvious to combine the selected teachings of Crump and Baker.

Based on the record before us, Petitioner has not demonstrated a reasonable likelihood that it will prevail on its assertion that claims 1, 2, 4, 6, 17, 18, 20, and 22 would have been obvious over Crump and Baker.

iv. Crump and Floyd

Floyd is directed to a heating system for a hot melt mix applicator hose, having a three-phase heating element. Ex. 1009, Abstract. Petitioner asserts Floyd discloses a thin-wall tube, the stainless steel limitation of claims 6 and 22, and the hot thermoplastic materials used for fused deposition modeling as described by the '124 patent. Pet. 39–41. Petitioner further asserts that motivation to combine Floyd and Crump may be found within Crump "as discussed above." *Id.* at 41 (citing Ex. 1005, 2:42–51).

Patent Owner argues that Floyd fails to disclose a thin-wall tube for receiving a filament of material and delivering material in a molten state. Prelim. Resp. 36–38. Patent Owner also argues that Petitioner fails to provide an articulated reasoning with rational underpinning to combine Crump and Floyd. *Id*. at 38–41.

We are not persuaded that Petitioner provides adequate explanation for how or why one of ordinary skill in the art would have combined Crump and Floyd. *See* Section III.B.i, *supra*. Petitioner's obviousness arguments are directed to Floyd supplying the "missing elements" of the claims not taught by Crump, namely, the thin-wall tube and the stainless steel claim limitations. Pet. 39–41. Petitioner's assertion that one of ordinary skill in the art would have combined the references because "[i]t would have been obvious to use a thin-wall tube for the extrusion of a plastic filament in the extrusion head of Crump" (*id.* at 40) is conclusory and insufficient to show a reasonable likelihood of prevailing on the issue of obviousness over the combination of

Crump and Floyd. Nor are we persuaded that a person of ordinary skill in the art would have combined these references because "the combination of Crump and Floyd, *et al.* is supported by a reasoned rationale found in the teaching of both references." *Id.* at 41. Petitioner cites the Campbell Declaration (*id.*, citing Ex. 1003 ¶¶ 61, 89) to support the combination of Crump and Floyd; Dr. Campbell, however, fails to provide any additional explanation or evidence demonstrating it would have been obvious to combine the selected teachings of Crump and Floyd.

Based on the record before us, Petitioner has not demonstrated a reasonable likelihood that it will prevail on its assertion that claims 1, 2, 4, 6, 17, 18, 20, and 22 would have been obvious over Crump and Floyd.

C. Conclusion

For the foregoing reasons, Petitioner has not demonstrated a reasonable likelihood of prevailing with respect to its challenge of claims 1, 2, 4, 6, 17, 18, 20, and 22 of the '124 patent.

IV. ORDER

In consideration of the foregoing, it is hereby:

ORDERED that the Petition is *denied* as to all challenged claims of the '124 patent; and

FURTHER ORDERED that no *inter partes* review is instituted.

PETITIONER:

William J. Cass
Herbert M. Bedingfield
CANTOR COLBURN LLP
wcass@cantorcolburn.com
hbedingfield@cantorcolburn.com

Brad D. Pedersen
PATTERSON THUENTE PEDERSEN, P.A.
prps@ptslaw.com

PATENT OWNER:

Walter C. Linder
FAEGRE BAKER DANIELS LLP
walter.linder@faegrebd.com